OPERATING INSTRUCTIONS

TYPE 1608-A

IMPEDANCE BRIDGE

1608-A

GENERAL RADIO COMPANY

A

OPERATING INSTRUCTIONS

TYPE 1608-A
IMPEDANCE BRIDGE

Form 1608-0100-A
February, 1962

GENERAL RADIO COMPANY
WEST CONCORD, MASSACHUSETTS, USA

TABLE OF CONTENTS

SPECIFICATIONS

RANGES

Capacitance: 0.05 pf to 1100 μf in seven ranges, series or parallel.

Inductance: 0.05 μh to 1100 h in seven ranges, series or parallel.

Resistance: 0.05 mΩ to 1.1 MΩ ac or dc.

Conductance: 0.05 n℧ to 1.1 ℧ ac or dc (20 k$\mathrm{M}\Omega$ to 0.9 Ω).

***D* of Series *C*:** 0.0005 to 1.

***D* of Parallel *C*:** 0.02 to 2.

***Q* of Series *L*:** 0.5 to 50.

***Q* of Parallel *L*:** 1 to 2000.

***Q* of Series *R*:** 0.0005 to 1.2 inductive.

***Q* of Parallel *G*:** 0.0005 to 1.2 capacitive.

ACCURACY

C, G, R, L

At 1 kc: ±0.1% ±0.005% of full scale except on lowest R and L ranges and highest C and G ranges where it is ±0.2% ±0.005% of full scale.

Additional % error terms for high frequency and large phase angle:

C* and *L

$$\left[\pm 0.001\left(\frac{f}{1\ \mathrm{kc}}\right)^2 \pm 0.1\mathrm{D}\frac{f}{1\ \mathrm{kc}} \pm 0.5\mathrm{D}^2\right]\%$$

of measured quantity.

R* and *G

$$\left[\pm 0.002\left(\frac{f}{1\ \mathrm{kc}}\right)^2 \pm 0.000001\left(\frac{f}{1\ \mathrm{kc}}\right)^4 \pm 0.1\mathrm{Q}\right]\%$$

of measured quantity.

Residual Terminal Impedance: $R \simeq 1$ mΩ, $L \simeq$ 0.15 μh, $C \simeq 0.25$ pf.

Dc Resistance and Conductance: Same as for 1-kc measurements, except that accuracy is limited by sensitivity at the range extremes. Balances to 0.1% are possible from 1Ω to 1MΩ with the internal supply and detector.

***D* $\left(\text{or } \frac{1}{Q}\right)$ of *C* or *L*:**

$\pm 0.0005 \pm 5\%$ at 1 kc or lower.

$\pm 0.0005 \frac{f}{1\ \mathrm{kc}} \pm 5\%$ above 1 kc.

***Q* of *R* or *G*:** $\pm 0.0005 \frac{f}{1\ \mathrm{kc}} \pm 2\%$.

GENERATOR AND DETECTOR

Internal Oscillator: 1 kc ±1% normally supplied. Plug-in modules for other frequencies available on request. Level control provided.

Internal Ac Detector: Can be used either flat or selective at frequency of plug-in module (normally 1 kc). Second-harmonic rejection approximately 25 db; sensitivity control provided.

Internal Dc Supplies: 3.5 v, 35 v, 350 v; adjustable, and power limited to less than ⅓ watt.

Internal Dc Detector: Null indicator, 1 μa/mm.

External Oscillator and Detector: TYPE 1210-C Unit RC Oscillator and TYPE 1232-A Tuned Amplifier and Null Detector are recommended.

Dc Bias: Provision is made for biasing capacitors to 600 v with external supplies, and for biasing current in inductors.

GENERAL

Accessories Supplied: TYPE CAP-22 3-Wire Power Cord; spare fuses and indicator lamps.

Accessories Available: TYPE 1650-P1 Test Jig; external generator and detector, if used, as listed above.

Power Input: 105 to 125 (or 210 to 250) volts, 50-60 cps, 10 watts.

Mounting: Either relay-rack or bench, as listed below.

Dimensions: Rack model, panel, 19 by 12¼ inches (485 by 315 mm); bench model, width 19, height 12½, depth 11½ inches (485 by 320 by 295 mm), over-all.

Net Weight: 36¾ pounds (17 kg).

General Radio Experimenter reference: Vol. 36 No. 3, March 1962

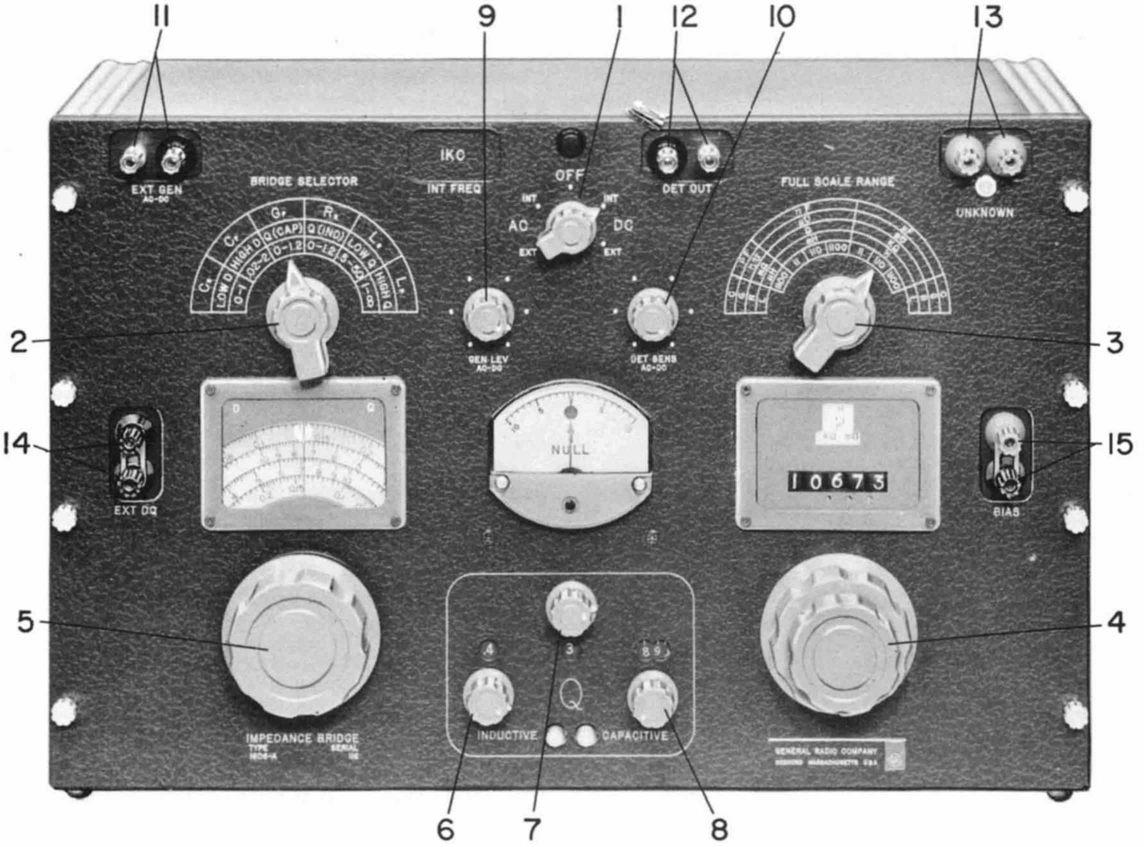

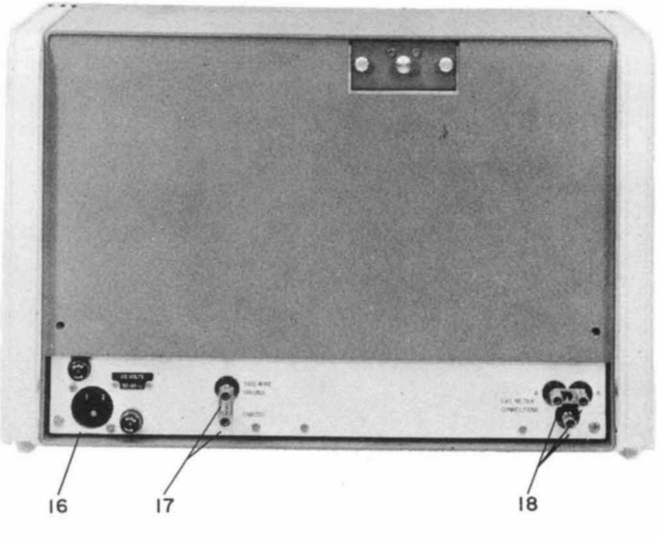

Figure 1-1. The Type 1608-A Impedance Bridge (for legend see page 2).

SECTION 1

INTRODUCTION

1.1 PURPOSE.

The Type 1608-A Impedance Bridge (Figure 1-1) is a self-contained impedance-measuring system, which includes six bridges for the measurement of capacitance, conductance, resistance, and inductance, as well as the generators and detectors necessary for dc and 1-kc ac measurements.

1.2 DESCRIPTION.

1.2.1 GENERAL. The six bridges contained in the Type 1608-A are shown schematically in Figure 1-2. Provision is made for ac and dc measurements, both with internal and external generator and detector. The generator and detector connections for the four "on" positions of the function switch (INT AC, INT DC, EXT AC, EXT DC) are shown schematically in Figure 1-3.

1.2.2 CONTROLS AND CONNECTORS. Table 1-1 lists the controls and connectors on the front and rear panels of the Type 1608-A Impedance Bridge.

1.3 SYMBOLS, ABBREVIATIONS, AND DEFINITIONS.

Table 1-2 lists symbols and abbreviations used in this manual, together with their definitions.

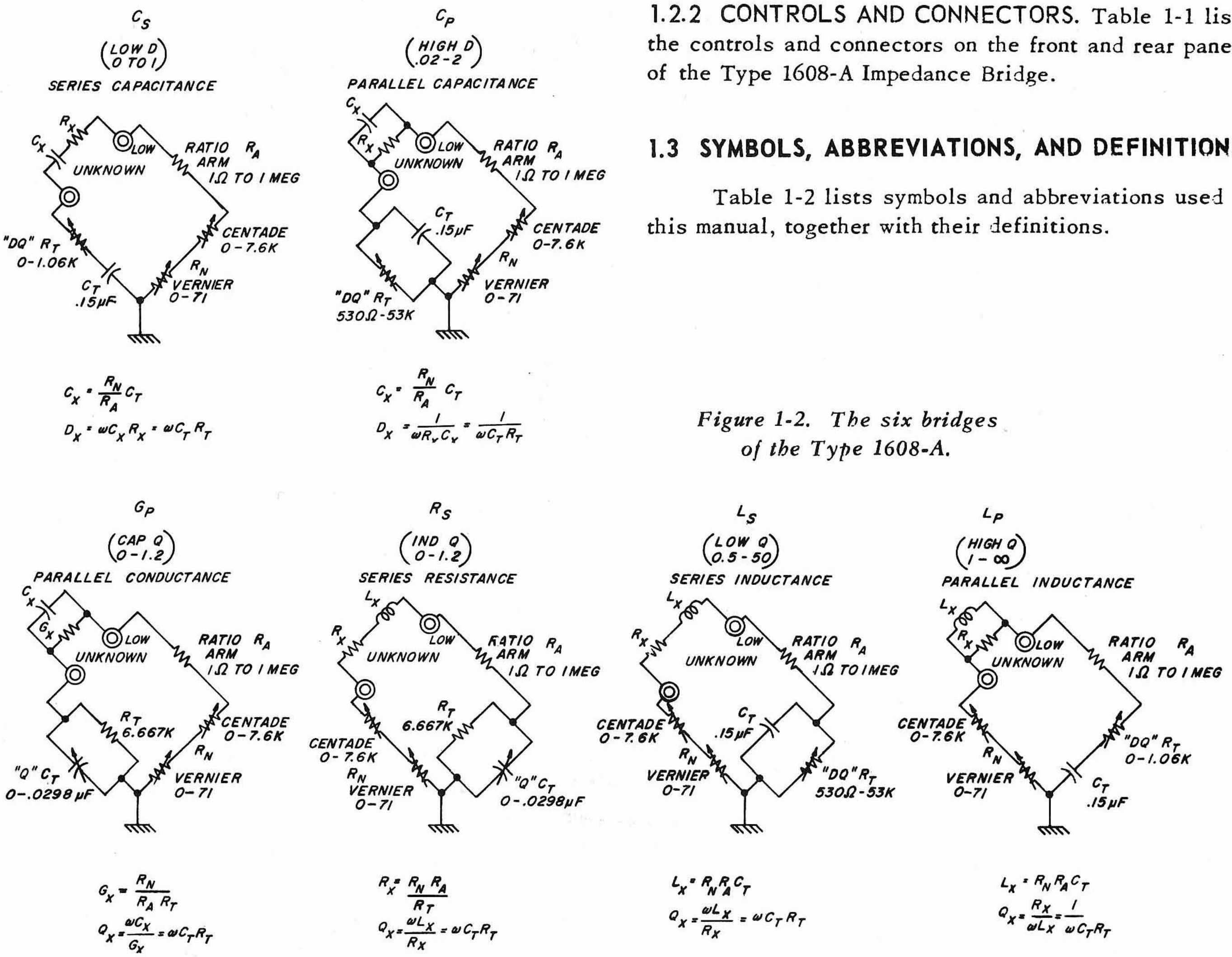

Figure 1-2. The six bridges of the Type 1608-A.

TABLE 1-1
TABLE OF CONTROLS AND CONNECTORS

CONTROLS

Fig. 1-1 Ref	Name	Type	Function
1	Function	5-pos rotary switch	Turn instrument on or off, selects internal or external ac or dc operation.
2	BRIDGE SELECTOR	6-pos rotary switch	Selects appropriate bridge circuit for measurement of C_s, C_p, G_p, R_s, L_s, and L_p.
3	FULL SCALE RANGE	7-pos rotary switch	Selects measurement range, indicates full-scale value of CGRL indicator.
4	CGRL	coaxial rotary controls	Main balance control. Small knob controls two right-hand digits of indicator, large knob controls three left-hand digits.
5	DQ	Continuous rotary control	DQ balance control, used for C and L measurements
6	Q	12-pos rotary switch	Q balance controls, used in G and R measurements.
7		11-pos rotary switch	
8		Continuous rotary control	
9	GEN LEV	Continuous rotary control	Controls output level of internal generator, ac and dc.
10	DET SENS	Continuous rotary control	Controls sensitivity of internal detector, ac and dc.

CONNECTORS

Fig 1-1 Ref	Name	Type	Function
11	EXT GEN	Jack-top binding-post pair	Connection to external generator, ac and dc.
12	DET OUT	Jack-top binding-post pair	Output connection from internal detector. ac only.
13	UNKNOWN	Jack-top binding-post pair	Connection to unknown component.
14	EXT DQ	Jack-top binding-post pair	Connection to external resistance or capacitance to extend DQ ranges.
15	BIAS	Jack-top binding-post pair	Connection to external bias supply.
16	Power	Three-terminal recessed male connector	Power input connector
17	3RD WIRE GROUND	Jack-top binding-post pair	Connection to ground wire of three-wire power line.
18	EXT METER CONNECTIONS	Three jack-top binding posts	Connection to external dc null indicator.

TABLE 1-2
SYMBOLS AND ABBREVIATIONS

C	capacitance (—|(—)
C_s	series capacitance
C_p	parallel capacitance
L	inductance (—ꝏ—)
L_s	series inductance
L_p	parallel inductance
R	resistance (—\/\/\/—) $R = \frac{1}{G}$
R_s	series resistance $R_s = \frac{1}{G_s}$
R_p	parallel resistance $R_p = \frac{1}{G_p}$
G	conductance (—\/\/\/—) $G = \frac{1}{R}$
G_s	series conductance $G_s = \frac{1}{R_s}$
G_p	parallel conductance $G_p = \frac{1}{R_p}$
Z	impedance, $Z = R + jX$
X	reactance, the imaginary part of an impedance
Y	admittance, $Y = G + jB$
B	the imaginary part of an admittance
Q	quality factor $= \frac{X}{R} = \frac{B}{G} = \frac{1}{D}$
	for inductors or inductive resistors $Q = \frac{\omega L_s}{R_s} = \frac{R_p}{\omega L_p}$
	for capacitive resistors $Q = \omega C_p R_p$
D	dissipation factor $= \frac{R}{X} = \frac{G}{B} = \frac{1}{Q}$
	for capacitors $D = \omega R_s C_s = \frac{1}{\omega C_p R_p}$
PF	power factor $= \frac{R}{\sqrt{R^2 + X^2}}$
f	frequency
ω	angular frequency $= 2\pi f$
Ω	ohm, a unit of resistance, reactance or impedance
kΩ	kilohm $1\ k\Omega = 1000\ \Omega$
MΩ	megohm $1\ M\Omega = 1{,}000{,}000\ \Omega$
mΩ	milliohm $1\ m\Omega = 0.001\ \Omega$
	mho, a unit of conductance, susceptance or admittance
m$\mho$	millimho $1\ m\mho = .001\mho$
$\mu\mho$	micromho $1\ \mu\mho = 1 \times 10^{-6}\mho$
n $\mho$	nanomho $1\ n\mho = 1 \times 10^{-9}\mho$
μf	microfarad, a unit of capacitance
nf	nanofarad $1\ nf = 0.001\ \mu f = 1\ m\mu f$
pf	picofarad $1\ pf = 1 \times 10^{-6}\ \mu f = 1\ \mu\mu f$
h	henry, a unit of inductance
mh	millihenry $1\ mh = 0.001\ h$
μh	microhenry $1\ \mu h = 1 \times 10^{-6}\ h$

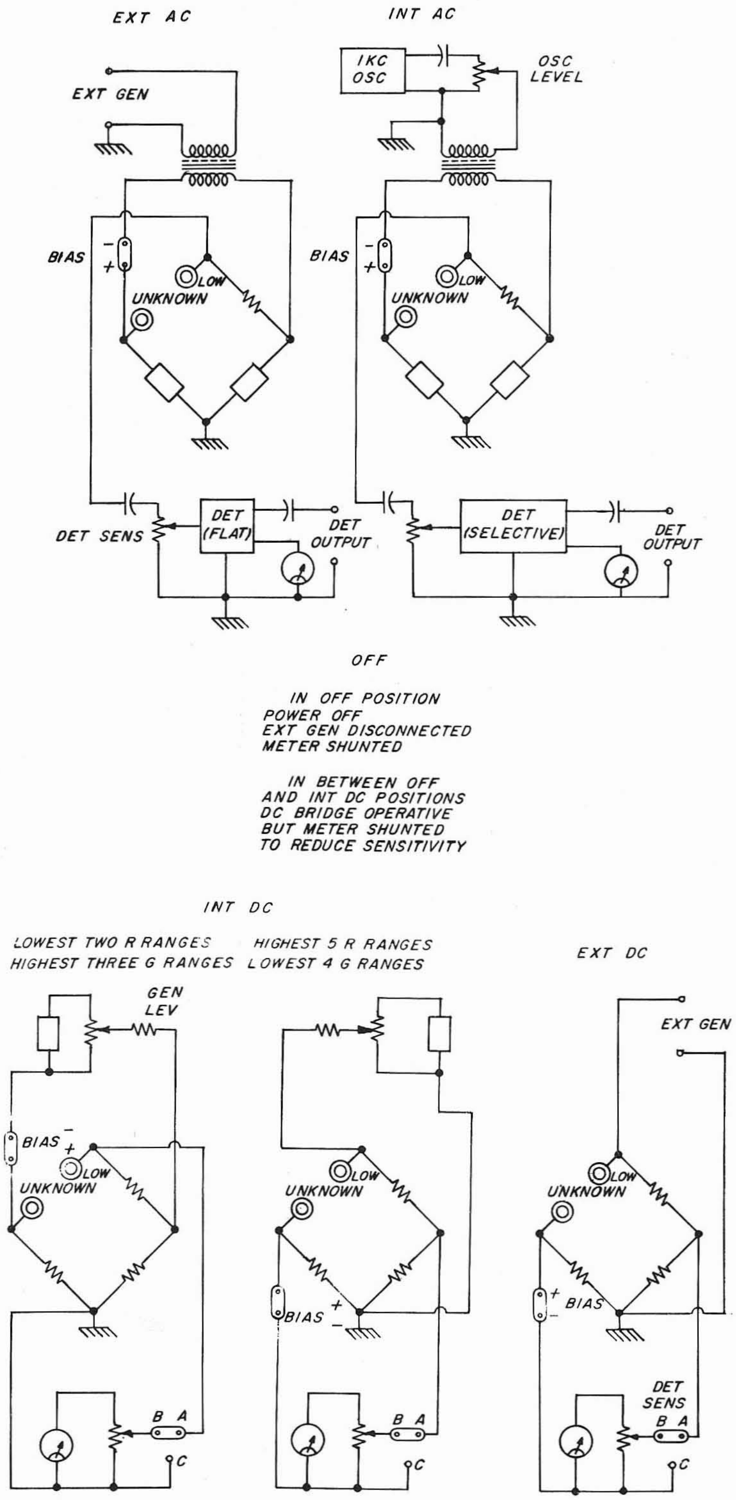

Figure 1-3. Generator and detector connections.

1.4 SERIES AND PARALLEL PARAMETERS.

An impedance that is neither a pure reactance nor a pure resistance can be represented at any specific frequency by either a series or a parallel combination of resistance and reactance. The values of resistance and reactance used in the equivalent circuit depend on whether a series or parallel representation is used. The equivalent circuits are shown in Figure 1-4. A nomograph for series-parallel conversion is given in Figure 1-7. The relationships between the various circuit elements are as follows:

Resistance and Inductance

$$Z = R_s + j\omega L_s = \frac{j\omega L_p R_p}{R_p + j\omega L_p} = \frac{R_p + jQ^2\omega L_p}{1 + Q^2}$$

$$Y = G_p + \frac{1}{j\omega L_p} = \frac{1}{R_s + j\omega L_s} = \frac{G_s + \frac{Q^2}{j\omega L_s}}{1 + Q^2}$$

$$Q = \frac{1}{D} = \frac{\omega L_s}{R_s} = \frac{R_p}{j\omega L_p}$$

$$L_s = \frac{Q^2}{1+Q^2} L_p = \frac{1}{1+D^2} L_p \, ; \; L_p = \frac{1+Q^2}{Q^2} L_s = (1+D^2) L_s$$

$$R_s = \frac{1}{1+Q^2} R_p ; \; R_p = (1+Q^2) R_s ; \; L_s = \frac{R_s Q}{\omega} ; \; L_p = \frac{R_p}{Q\omega}$$

Resistance and Capacitance

$$Z = R_s + \frac{1}{j\omega C_s} = \frac{R_p}{1 + j\omega C_p R_p} = \frac{D^2 R_p + \frac{1}{j\omega C_p}}{1 + D^2}$$

$$Y = G_p + j\omega C_p = \frac{j\omega C_s}{1 + j\omega C_s R_s} = \frac{D^2 G_s + j\omega C_s}{1 + D^2}$$

$$D = \frac{1}{Q} = \omega R_s C_s = \frac{1}{\omega C_p R_p}$$

$$Q = \frac{\omega C_p}{G_p} = \omega R_p C_p$$

$$C_s = (1 + D^2) C_p ; \; C_p = \frac{1}{1+D^2} C_s$$

$$R_s = \frac{D^2}{1+D^2} R_p = \frac{1}{1+Q^2} R_p = \frac{1}{(1+Q^2) G_p}$$

$$R_p = \frac{1+D^2}{D^2} R_s = (1+Q^2) R_s$$

$$G_p = \frac{1}{(1+Q^2) R_s} ; \; C_p = \frac{Q G_p}{\omega}$$

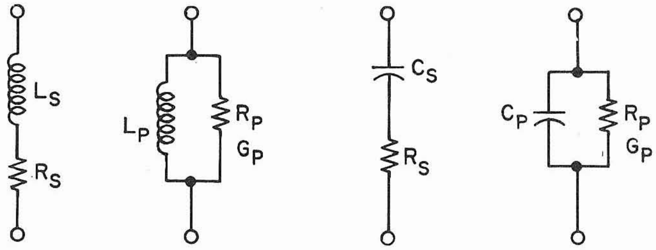

Figure 1-4. Equivalent circuits for complex impedance.

1.5 ACCURACY OF MEASUREMENTS.

1.5.1 CGRL ACCURACY AT 1 KC. The basic bridge accuracy is 0.1%. This is a function of the accuracy of the adjustment and stability of the bridge arms. The instrument is initially calibrated to an accuracy of ±0.05% or better and should hold the 0.1% accuracy for well beyond the two-year warranty period. A simple calibration check procedure is given in Section 5.2.

The lowest-resistance (1-ohm) resistance ratio arm is the most difficult ratio arm to set accurately, is the most affected by switch and lead resistance, and has slightly poorer stability than the other arms. Therefore, the accuracy specification for the lowest impedance range for each bridge is 0.2%.

The fixed error of ±0.005% of full scale or one-half a digit on the counter read-out allows for backlash in the adjustment and for the limitations of linearity and resolution of the vernier rheostat. This fixed error gives an over-all accuracy at 1 kc (on all but the lowest range) of 0.105% at full scale and 0.15% at one-tenth of full scale. Therefore, the final balance should be made with as many digits on the counter as possible.

1.5.2 TEMPERATURE COEFFICIENT.

The over-all temperature coefficient of the instrument is less than 30 ppm/°C. This means that there may be a 0.03% change in reading for a temperature change of 10°C (50°F). This change is usually negligible compared with the change in the unknown component for a similar temperature change. For the most accurate measurements, the bridge and components to be measured should be stabilized at a temperature near 23°C (73°F).

1.5.3 ADDITIONAL ERRORS FOR HIGH D CAPACITORS, LOW Q INDUCTORS, AND HIGH Q RESISTORS.

The DQ dial adjustments used for phase balance on the C and L bridges are wire-wound rheostats. When lossy (high D or low Q) components are measured, the limited resolution of these adjustments prohibits balance of the C or L adjustment to its full resolution. A term of $0.5\%D^2$ is added to the specifications to allow for this effect, but somewhat better accuracy is possible with extreme care. Precision components generally have a low enough D or a high enough Q to make this term negligible (see Figure 1-5).

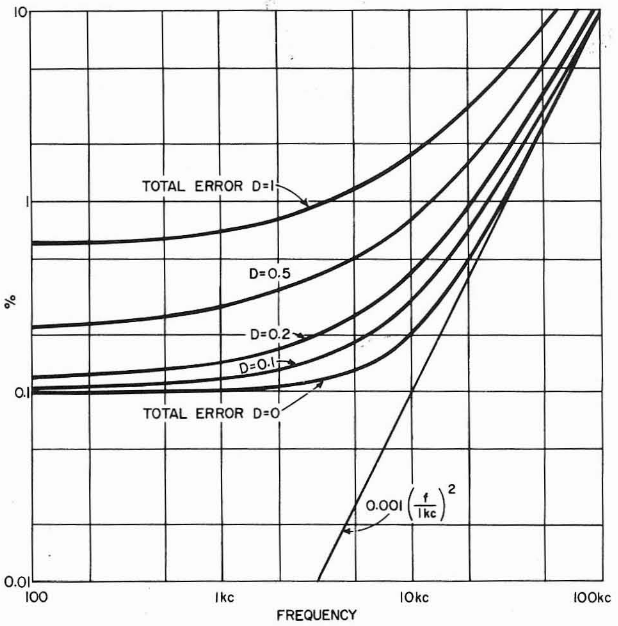

Figure 1-5. Capacitance and inductance errors vs frequency.

The Q adjustment for the R_S and G_P bridges consists of two decades of mica capacitors and a variable capacitor with infinite resolution. Losses in the mica capacitors appear as an R or G error when Q is relatively large, and the added error term of 0.1%Q is therefore necessary (see Figure 1-6).

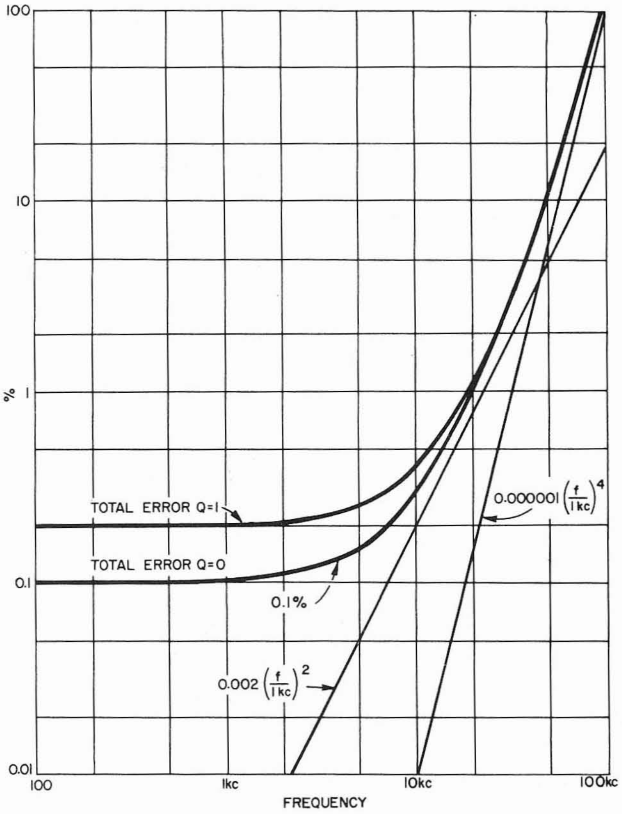

Figure 1-6. Resistance and conductance errors vs frequency.

1.5.4 FREQUENCY ERRORS.

The main cause of additional error on the C and L bridges at higher frequencies is the inductance of the bridge wiring in series with the standard capacitor, effectively increasing its value. This error is proportional to f^2, and is accounted for in the added error term $0.001\% (f/1\ kc)^2$. This term, which amounts to a 0.1% error at 10 kc and a 0.4% error at 20 kc, is large enough to account for other smaller sources of error (see Figure 1-5).

For high D (low Q) measurements at high frequencies, there is an added error term due to the inductance of the DQ rheostats. This term is 0.1D (f/1 kc). (See Figure 2-7.) The series rheostat (C_S and L_P bridges) is phase-compensated to a large degree, but nevertheless adds inductance in series with the standard capacitor. The inductance of the parallel rheostat (C_s and L_p bridges) is placed in parallel with the standard capacitor, and at high enough D values effectively reduces the capacitance of this bridge arm. The error on the C_p and L_s bridges is somewhat less, and these bridges have more useful D and Q ranges at high frequencies (see Figure 2-7).

A frequency-dependent error term is necessary for the resistance and conductance bridges because of a network built into the standard resistance arm to compensate for stray capacitance (refer to paragraph 4.5). The effective resistance of this arm has one term proportional to f^2 and one proportional to f^4, requiring the added error terms $\pm 0.002\ (f/1\ kc)^2$ and $\pm 0.000001\ (f/1\ kc)^4$. The first term is more important up to 45 kc, and adds an extra 0.2% error at 10 kc and 0.8% error at 20 kc (see Figure 1-6).

1.5.5 RESIDUAL TERMINAL IMPEDANCE.

The accuracy specifications are valid only if the effect of the residual terminal impedance of the UNKNOWN connection is considered. The residual resistance and capacitance can be easily measured and subtracted from the final measured value. At high frequencies somewhat more complicated corrections are necessary, particularly at the range extremes, and correction formulae are given in Table 2-5 .

1.5.6 D AND Q ACCURACY.

The 5-percent term in the D and Q accuracy specifications for C and L measurements depends upon the tracking accuracy of the DQ rheostats with the dial calibration. The fixed term, ±0.0005, depends upon the phase angle of each arm of the bridge, and many compensating components are required to achieve this accuracy (refer to paragraph 4.5). This specification of ±0.0005 holds for measurements made down to 1/20 of the full-scale CGRL counter reading. Below this reading, the phase angle of the vernier CGRL adjustment (R4), even though compensated for, can add additional DQ error. This could amount to an error of 0.001 at 1/100 of full scale and 0.005 at 1/1000 of full scale. The detector sensitivity is also a limiting factor here. Lower CGRL ranges should be used to achieve better D and Q accuracy.

At high frequencies the DQ error increases because the phase angles of the bridge arms increase with f. Therefore, this fixed error term is $0.0005 \frac{f}{1\ kc}$ above 1 kc. At frequencies below 1 kc, the D accuracy cannot be improved because it is limited by the D of the standard capacitor.

The percent term in the Q accuracy for R_s and G_p bridges is ±2%, which is limited by the accuracy of the capacitance decades used for Q adjustment. The fixed term is ±0.0005 at 1 kc, just as in the L and C bridges, since the same phase angle considerations apply. However, for the R_s and G_p bridges, this term is $\pm 0.0005 \frac{f}{1\ kc}$ at higher and at lower frequencies. This gives extremely good Q accuracy at low frequencies, but does not help in the measurement of the time constant (Q/ω) of resistors, which is independent of frequency (except at very high frequencies).

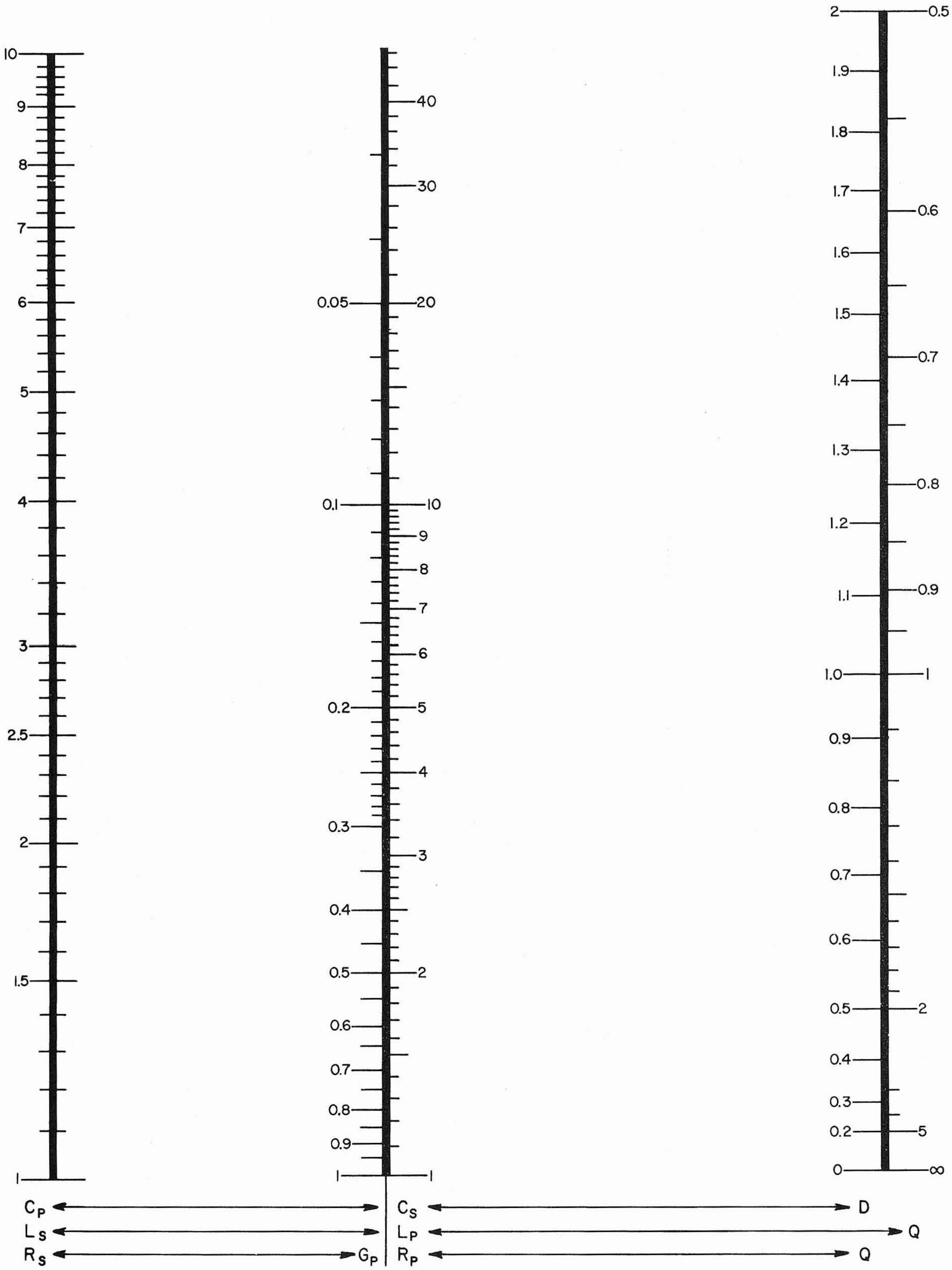

Figure 1-7. Nomograph for conversion of C, L, R, D, and Q at 1 kc.

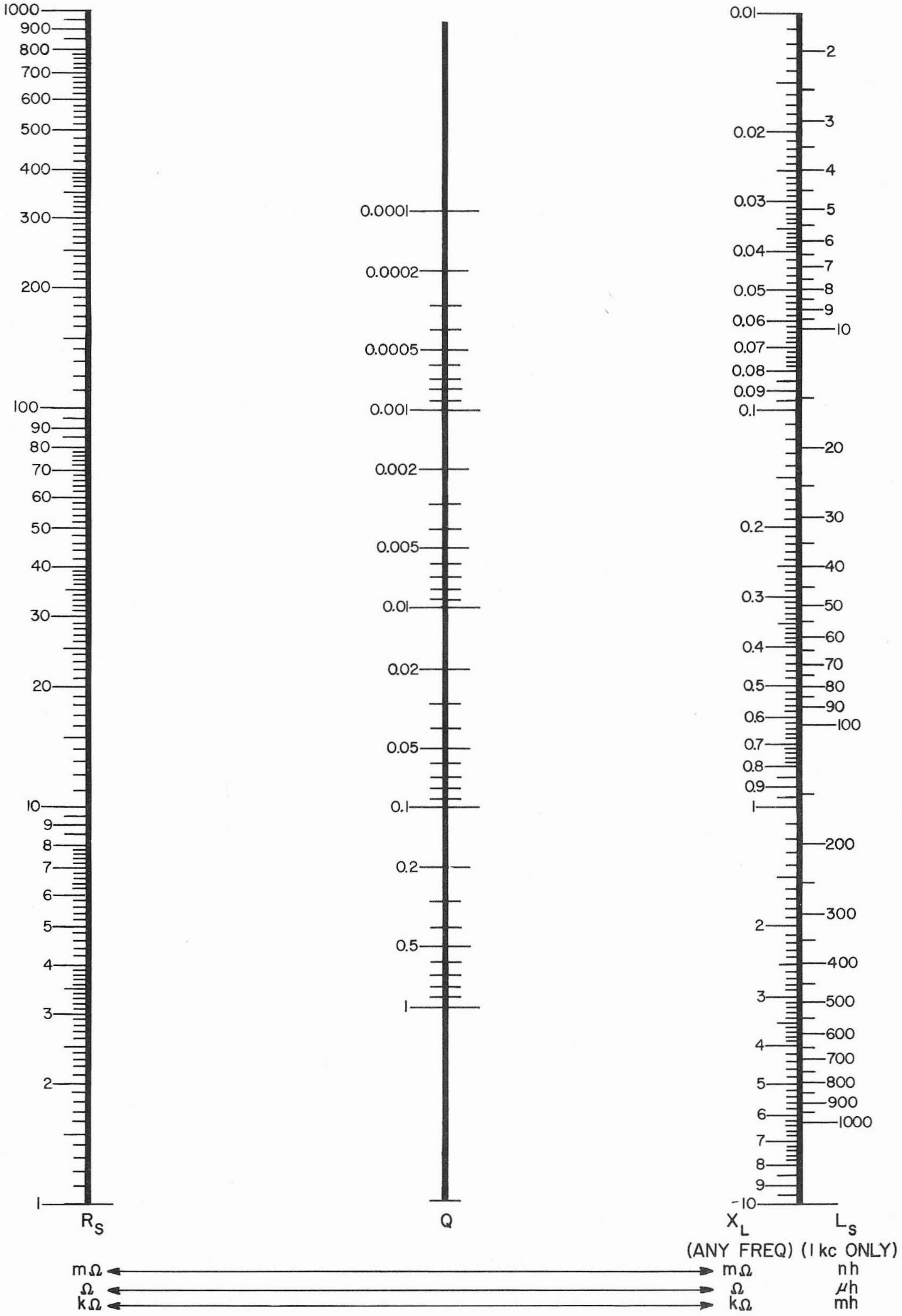

Figure 1-8. Nomograph for conversion of R_S to L_S and vice versa.

SECTION 2

OPERATING PROCEDURE

2.1 INSTALLATION.

2.1.1 POWER CONNECTIONS. Connect the bridge to a suitable power source as indicated on the plate above the power receptacle on the rear of the instrument (115 or 230v, 50-60 cps). A three-wire power cord is supplied.

2.1.2 GROUNDING. The bridge should generally be operated with the bridge chassis grounded except in specific cases where the unknown component or a dc bias supply should be grounded (refer to paragraphs 3.1.5 and 3.5). The ground connection is made through the three-wire power cord to the 3RD WIRE GROUND terminal on the rear of the instrument. This terminal should be connected to the adjacent CHASSIS terminal unless the bridge must be ungrounded. If the three-wire power cord is not used, this connection should be made externally.

2.1.3 MOUNTING. The instrument is available as either the Type 1608-AM, for bench mounting, or Type 1608-AR, for relay-rack mounting. The bench-mounting model is equipped with aluminum end frames, while the Type 1608-AR includes mounting brackets for relay-rack installation. Instructions for assembly accompany these brackets, which may be ordered separately (Type ZSU-6-7) to convert from bench to rack use.

Type ZSU-6-7 mounting brackets are of a unique General Radio design which permits the instrument to be pulled out on slides for service. Either chassis or cabinet can be removed from the rack independently of the other.

2.2 INTERPRETATION OF "X" IN READ-OUT.

The main CGRL indication consists of up to five digits displayed in an in-line read-out. The three left-hand digits are controlled by the larger of the two concentric CGRL controls; the two right-hand digits are controlled by the smaller (vernier) control. To provide an overlapping transition from full-scale vernier reading (99) to the next higher coarse step, the vernier read-out extends beyond 99, up to 106. To avoid the ambiguity of two digits on the same counter, an X is used in place of the number 10. To interpret a reading containing an X, simply substitute 0 for the X and add 1 to the digit immediately to the left of the X. For example, 102X3 = 10303; 99X2 = 10002.

The letter X is also used on two of the three Q dials used with the R_s and G_p bridges. Here again, substitute 0 in place of the X and add 1 to the digit to the left of the X. For example, .1X4 = .204; .2XX = .310.

Users may find it helpful to record measurement data exactly as it appears on the bridge read-out, including any X's that appear. In that way, any possible error in the interpretation of the X can be rechecked.

2.3 DC RESISTANCE MEASUREMENTS.

2.3.1 PROCEDURE.

a. With the function switch (1, Figure 1-1) off, check the NULL meter mechanical zero position, and, if necessary, center the pointer with the screw-driver adjustment on the meter.

b. Turn the DET SENS control almost fully counterclockwise.

c. Set the BRIDGE SELECTOR switch to R_s for resistance measurements from 0 to 1.1 MΩ and G_p for resistance measurements above 1 MΩ and for conductance measurements from 0 to 1.1 mho.

d. Connect the resistor to be measured to the UNKNOWN terminals.

e. Turn the function switch to INT DC.

NOTE

> As the function switch is rotated from OFF to INT DC, it passes through an undetented position where the circuit is operative but the meter sensitivity is greatly reduced. A preliminary balance may be made with the switch in this position instead of with the DET SENS control turned down.

f. Adjust the FULL SCALE RANGE switch and the concentric CGRL balancing controls for a zero (center) reading, and adjust the DET SENS and GEN LEV controls for increased sensitivity as necessary. A meter deflection to the right indicates that the unknown is larger than the indicated CGRL dial setting. For greatest accuracy the reading should have at least four digits showing. If not, turn to the next lower range.

g. The value of the UNKNOWN is read directly on the counter with the decimal point correctly located and the unit illuminated above. The meaning of an X indicator is explained in paragraph 2.2.

2.3.2 ACCURACY. The accuracy of dc resistance and conductance measurements is ±0.1%, ±0.005% of full scale (which is ±1/2 of the last digit) on all but the lowest R and highest G ranges as long as there is sufficient sensitivity. On the lowest R and highest G range the accuracy is limited by the sensitivity to ±1/2% ±1 mΩ.

For low-resistance measurements, short, heavy leads should be used as connections to the unknown component. Measure the zero resistance of the leads and terminals by connecting the free ends together, and subtract this amount from the bridge reading with the unknown in place. For best connection to the bridge, screw the binding post hard enough to notch the wire inserted in the hole.

2.3.3 INTERNAL VOLTAGE APPLIED TO THE UNKNOWN. There are three internal dc supplies, each having a limiting resistor to limit the available power to 1/2 watt or less to avoid damage to the bridge components or to the unknown. They are all controlled by the GEN LEV panel control. The lowest voltage supply, approximating 3.5 volts open circuit, is applied "horizontally" to the bridge (see Figure 1-3) and the 35-volt and 350-volt supplies are applied "vertically". The FULL SCALE RANGE switch selects the optimum supply for each range as given in Table 2-1.

Because of the limiting resistor, the maximum voltage applied to the unknown is usually of much less than the open-circuit value. Figure 2-1 shows the actual voltage applied to any unknown resistor when measured on the R bridge (with a 115-volt line voltage).

EIA specifications for testing different types of resistors are summarized in Tables 2-2 and 2-3. Figure 2-1 shows that these standard voltages can be supplied from the internal power supplies over most of the resistance range. For low-resistance measurements the GEN LEV control can be set for the desired test voltage by use of a high-impedance dc voltmeter connected directly to the UNKNOWN terminals. For high-resistance measurements, where the voltage is applied vertically, the ratio between the voltage across the unknown and that across the whole bridge is fixed over each range at null and therefore the voltmeter can be placed across the bridge input (LOW UNKNOWN terminals to chassis) and the GEN LEV control set to give the "bridge voltage" given in Tables 2-2 and 2-3.

2.3.4 EXTERNAL DC DETECTOR. The internal dc supplies and the internal detector permit measurements from 1 ohm to 1 megohm to 0.1% when the GEN LEV and DET SENS controls are at maximum. If accurate measurements beyond this range are desired or if it is necessary to make measurements at lower voltages, an exter-

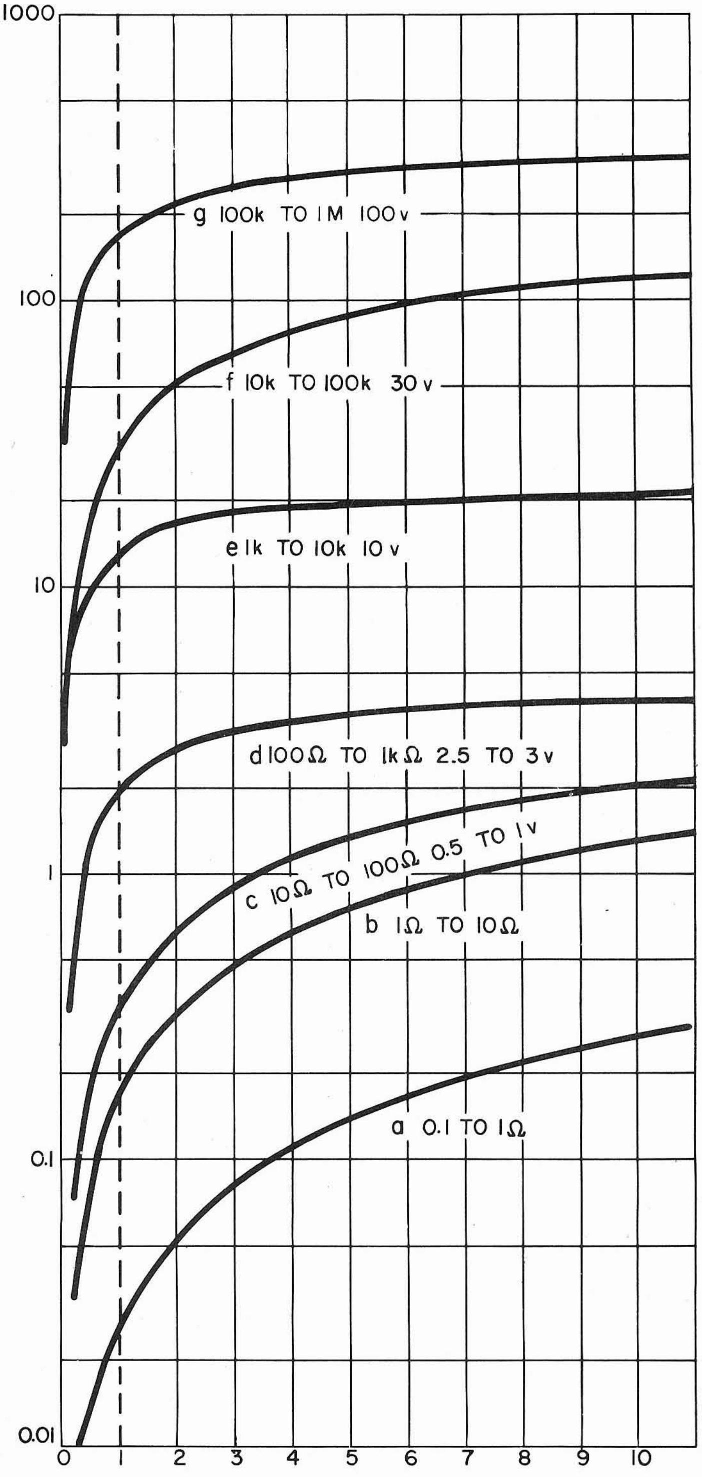

Figure 2-1. Dc voltage applied to unknown resistor (115-v line).

TABLE 2-1
DC SOURCE AND DETECTOR CONNECTIONS

R_s Bridge	FULL SCALE RANGE	1100 mΩ	11 Ω	110 Ω	1100 Ω	11 kΩ	110 kΩ	1100 kΩ
	VERTICAL	METER			MVS		HVS	
	HORIZONTAL	LVS			METER			
G_p Bridge	FULL SCALE RANGE	1100 n℧	11 μ℧	110 μ℧	1100 μ℧	11 m℧	110 m℧	1100 m℧
	VERTICAL	HVS			METER			
	HORIZONTAL	METER			MVS		LVS	

HVS HIGH-VOLTAGE SUPPLY = 350 v open-circuit
MVS MEDIUM-VOLTAGE SUPPLY = 35 v open-circuit
LVS LOW-VOLTAGE SUPPLY = 3.5 v open-circuit

TABLE 2-2
EIA STANDARD TEST VOLTAGES

Fixed Composition Resistors (RS172)

RESISTANCE	BRIDGE	RANGE	EIA TEST VOLTAGE	BRIDGE VOLTAGE*
2.7 - 9.9 Ω	R_s	11 Ω	0.5 - 1 v	**
10 - 99 Ω	R_s	110 Ω	0.5 - 1 v	**
100 - 999 Ω	R_s	1100 Ω	2.5 - 3 v	19.2 - 23 v
1000 - 9999 Ω	R_s	11 kΩ	8 - 10 v	13.4 - 16.7 v
10 - 99 k Ω	R_s	110 kΩ	24 - 30 v	25.6 – 32 v
100 kΩ - 1 MΩ	R_s	1100 kΩ	80 - 100 v	81 - 101 v
1 MΩ - up	G_p	1 n℧	80 - 100 v	81 - 101 v

TABLE 2-3
EIA STANDARD TEST VOLTAGES

Fixed Film Resistors (RS-A6)
Low-Power Wire-Wound Resistors (REC-117 up to 9999 Ω)

RESISTANCE	BRIDGE	RANGE	EIA MAX VOLTAGE	MAX BRIDGE VOLTS*
less than 10 Ω	R_s	11 Ω	0.3 v	**
10 - 99 Ω	R_s	110 Ω	1 v	**
100 - 999 Ω	R_s	1100 Ω	3 v	23 v
1000 - 9999 Ω	R_s	11 kΩ	10 v	16.7 v
10 - 99 kΩ	R_s	110 k Ω	30 v	32 v
100 kΩ - 1 MΩ	R_s	1100 kΩ	100 v	101 v
1 MΩ - up	G_p	1 n℧	100 v	100 v

* This is the voltage from the LOW UNKNOWN terminal to chassis. In the EXT DC position, this is also the voltage at the EXT GEN terminals.

** This voltage varies with the resistance of the unknown (see paragraph 4.3).

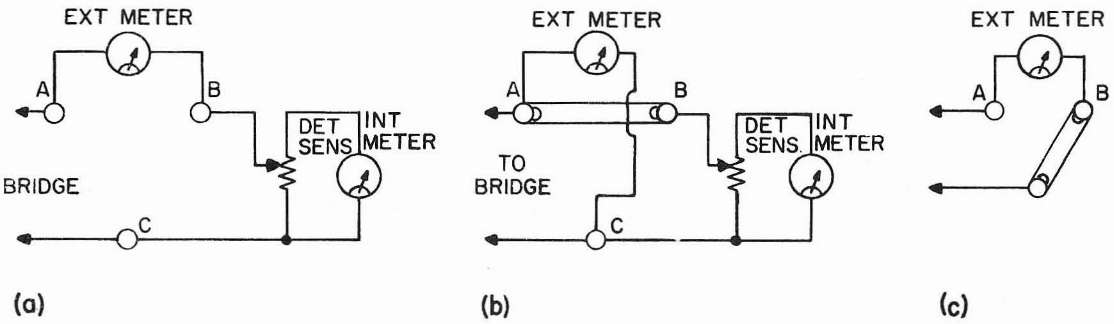

(a) (b) (c)

Figure 2-2. External meter connections.

nal detector with increased sensitivity can be used. The external detector can be connected in series with the internal meter, in parallel with the meter, or in place of the meter by appropriate connection to the EXT METER CONNECTIONS on the rear of the instrument as shown in Figure 2-2.

2.3.5 EXTERNAL DC SUPPLY.

If higher voltage is required on the unknown resistor, an external supply may be used. The EXT GEN terminals are connected directly across the vertical bridge diagonal in the EXT DC position of the function switch and the detector is across the horizontal diagonal on the top four ranges. Be careful not to exceed the maximum voltage or current given in Table 2-4 in order to avoid damage to the bridge components.

If a higher voltage is desired on a low-valued unknown resistor (the lower three resistance ranges), set the function switch to EXT GEN but apply the voltage between the BIAS terminals and the EXT DQ terminals (R bridge only).

When an external supply or detector is used, the measurement procedure is the same as that with the internal supply and detector except that the GEN LEV control does not control the level of an external supply and the DET SENS control does not control the sensitivity of an external detector.

2.4 AC MEASUREMENTS USING INTERNAL GENERATOR.

2.4.1 1-KC CAPACITANCE MEASUREMENT.

2.4.1.1 Procedure.

a. Set the GEN LEV control fully clockwise.

b. Set the BRIDGE SELECTOR to:

C_S - if the series capacitance is desired and D is less than 1.

C_P - if the parallel capacitance is desired and D is between 0.02 and 2.

(Note: $C_S = C_P$ within 0.1% if $D < 0.03$.)

G_P - if D is greater than 2 (measure as a conductance, $C_P = \frac{QG_P}{\omega}$).

TABLE 2-4

MAXIMUM EXTERNAL DC BRIDGE VOLTAGE AND CURRENT

BRIDGE	RANGE	E MAX	I MAX	TERMINALS
R_s	1100 mΩ	1.4 v	710 ma	BIAS
R_s	11 Ω	4.5 v	223 ma	BIAS
R_s	110 Ω	14.2 v	71 ma	BIAS
R_s	1100 Ω	22 v	17.2 ma	EXT GEN
R_s	11 kΩ	71 v	17.2 ma	EXT GEN
R_s	110 kΩ	223 v	17.2 ma	EXT GEN
R_s	1100 kΩ	400 v	17.2 ma	EXT GEN
G_p	1000 n℧	400 v	17.2 ma	EXT GEN

c. Set the function switch to INT AC.

d. Connect the unknown capacitor to the UNKNOWN terminals.

e. If the proper range setting of the FULL SCALE RANGE is not known, set the concentric CGRL controls for a reading somewhere near 5000, adjust the DET SENS control for an upscale meter reading and set the FULL SCALE RANGE switch for a minimum meter deflection.

f. Adjust the concentric CGRL controls and the DQ control for minimum meter deflection. The DET SENS control may have to be readjusted to give greater sensitivity as balance is approached.

g. The capacitance of the unknown is indicated directly on the counter readout with the correct decimal point and unit illuminated. The D of the unknown is indicated directly on the illuminated scale on the DQ dial. The meaning of an X indicator is explained in paragraph 2.2.

2.4.1.2 Accuracy. The accuracy of the C reading is ±0.1% of the reading ±0.005% of full scale (which is ±1/2 of the last digit) on all but the highest capacitance range, where the accuracy is ±0.2% of the reading ±0.005% of full scale. On the lowest C range it is necessary to subtract the residual ("zero") capacitance of the bridge terminals, approximately 0.25 pf, from the reading to determine the correct value of the unknown capacitor. If external leads are used to connect the unknown, this zero capacitance is increased and should be subtracted from the reading. The error caused by capacitance between the terminals and leads may be removed by means of a three-terminal shielded capacitance measurement (refer to paragraph 3.2).

The residual resistance and inductance of the bridge have negligible effect on the C or D accuracy except for a slight D error on the highest C range (D error = 0.006 when C_x = 1000 pf). However, if long leads are used when measurements are made on large capacitors, a correction for the lead resistance and inductance may be necessary. The correction terms are given in Table 2-5.

When capacitors with high D's are measured, an additional error of ±(0.5%) D^2 is added to the specification (refer to paragraph 1.5.3). This error is negligible when D is less than 0.2.

2.4.2 1-KC INDUCTANCE MEASUREMENT.

2.4.2.1 Procedure.

a. Set the GEN LEV control fully clockwise.

Note: For some iron-cored inductors the inductance measured will depend upon the excitation level (refer to paragraph 2.4.5.4).

b. Set the BRIDGE SELECTOR to:

L_s - if the series inductance is desired and Q is between 0.5 and 50.

L_p - if the parallel inductance is desired and Q is greater than 1.

(Note: $L_s = L_p$ within 1% if $Q > 32$)

R_s - if Q is less than 0.5 (measure R_s and Q; $L_s = \frac{QR_s}{\omega}$ refer to paragraph 2.4.3).

c. Set the function switch to INT AC.

d. Connect the inductor to be measured to the UNKNOWN terminals.

e. If the proper range setting of the FULL SCALE RANGE is not known, set the concentric CGRL controls for a reading somewhere near 5000, adjust the DET SENS control for an upscale reading, and set the FULL SCALE RANGE switch for a minimum meter deflection.

f. Adjust the concentric CGRL controls and the DQ control for minimum meter deflection. The DET SENS control may have to be readjusted to give greater sensitivity as balance is approached.

g. The inductance of the unknown is indicated directly on the counter readout with the correct decimal point and unit illuminated. The Q of the unknown is indicated directly on the illuminated scale of the DQ dial. The meaning of an X indicator is explained in paragraph 2.2.

2.4.2.2 Accuracy. The accuracy of the L reading is ±0.1% of the reading ±0.005% of full scale (which is ±1/2 of the last digit) on all but the lowest ranges, where the accuracy is ±0.2% of the reading ±0.005% of full scale. When Q is low there is an additional error of $0.5\% \frac{1}{Q^2}$, which is negligible when Q is approximately 5 or higher.

On the lowest range, the residual inductance of the binding posts (0.14 μh) must be subtracted from the reading in order to obtain full accuracy. If external leads are used to connect the unknown inductor to the bridge, then the residual inductance should be measured and subtracted from the L reading. To measure this lead inductance, short the leads together, measure the impedance on the R_s bridge, and calculate $L_s = \frac{QR_s}{\omega}$. Be careful to keep the lead configuration the same for the residual inductance measurement and the total inductance measurement, since an increase in the area between the leads would increase the residual inductance.

The residual resistance of the bridge is approximately 0.9Ω. This can cause a small Q error when L_x is small. If long leads are used, the Q error becomes more important (see Table 2-5). The residual bridge capacitance of 0.25 pf can cause an L error when L_x is very large. However, this capacitance is usually negligible compared with the capacitance of a large inductor. Long leads to the inductor may appreciably change the total capacitance. The corrections for these lead effects are given in Table 2-5.

When inductors with low Q's are measured, an additional error term of $\pm 0.5\% \frac{1}{Q^2}$ is added to the specifications (refer to paragraph 1.5.3). This error is negligible when Q is greater than 5.

TABLE 2-5
CORRECTIONS FOR ERRORS CAUSED BY TERMINAL AND LEAD IMPEDANCES

(Add or subtract from the measured value as indicated.)

Measured	Series Resistance $R_o = 0.9\,\text{m}\Omega$ + leads	Series Inductance $L_o = 0.14\ \mu\text{h}$ + leads	Parallel Capacitance $C_o = 0.25$ pf + leads
C_s	NO ERROR	$-\omega^2 L_o C_x^2$	$-C_o(1 - D_x^2)$
D	$-\omega C_x R_o$	$-\omega^2 L_o C_x D_x$	$+D \frac{C_o}{C_x}(1 + D^2)$
C_p	$+2R_o D_x \omega C_x^2$	$-\omega^2 L_o C_x^2 (1 - D_x^2)$	$-C_o$
D	$-\omega C_x R_o (1 + D_x^2)$	$-\omega^2 L_o C_x D_x (1 + D_x^2)$	$+\frac{C_o}{C_x} D_x$
G_p	$+G_x^2 R_o (1 + Q_x^2)$	$+\omega^2 L_o^2 G_x^3 (1 - \frac{2Q_x}{\omega G_x L_o})$	NO ERROR
Q	$+Q_x G_x R_o (1 - Q_x^2)$	$+\omega L_o G_x (1 + Q_x^2)$	$\frac{-\omega C_o}{G_x}$
R_s	$-R_o$	NO ERROR	$+\omega^2 C_o^2 R_x^3 (1 - \frac{2Q_x}{\omega C_o R_x})$
Q	$Q_x \frac{R_o}{R_x}$	$-\frac{\omega L_o}{R_x}$	$+\omega C_o R_x (1 + Q_x^2)$
L_s	NO ERROR	$-L_o$	$-\omega^2 C_o L_x^2 (1 - \frac{1}{Q_x^2})$
Q	$+Q_x^2 \frac{R_o}{\omega L_x}$	$-\frac{L_o}{L_x} Q_x$	$+\omega^2 C_o L_x (Q_x + \frac{1}{Q_x})$
L_p	$+\frac{2R_o}{Q\omega}$	$-L_o (1 - \frac{1}{Q_x^2})$	$-\omega^2 C_o L_x^2$
Q	$+\frac{R_o}{\omega L_x}(1 + Q^2)$	$-\frac{L_o}{L_x}(Q_x + \frac{1}{Q_x})$	$+\omega^2 C_o L_x Q_x$

2.4.3 1-KC RESISTANCE AND CONDUCTANCE MEASUREMENTS.

2.4.3.1 Procedure.

a. Set the GEN LEV control fully clockwise.

b. Set the BRIDGE SELECTOR to:

R_s - if series resistance is desired, and the resistance of the unknown is between 0 and 1 MΩ or if the unknown is inductive.

G_p - if parallel conductance is desired, and the conductance of the unknown is between 0 and 1 mho or if the unknown is capacitive.

(Note: Any resistor small enough to require use of the R_s bridge because of value will be inductive; likewise, any resistor large enough to require use of the G_p bridge will be capacitive. In the range between 1 Ω and 1 MΩ the phase of the resistor will determine which bridge is required unless Q is small enough to permit use of either bridge. R_s may be calculated from G_p, and vice versa, from the formula $R_s = \frac{1}{(1 + Q^2)\,G_p}$.

c. Set the function switch to INT AC.

d. Connect the unknown resistor to the UNKNOWN terminals.

e. If the proper range setting of the FULL SCALE RANGE is not known, set the concentric CGRL controls for a reading somewhere near 5000, adjust the DET SENS control for an upscale meter reading and set the FULL SCALE RANGE switch for a minimum meter deflection.

f. Adjust the concentric CGRL controls and the three Q controls for the best minimum meter deflection. The DET SENS control may have to be readjusted to give greater sensitivity as balance is approached.

g. The resistance or conductance of the unknown is indicated directly on the counter readout with the decimal point and unit illuminated. The Q of the unknown is read directly on the Q readout and is inductive or capacitive as indicated by the lights (unless the Q balance is less than 0, in which case the opposite is true). Note the decimal point in the first (coarsest) adjustment, which makes major divisions on the vernier dial steps of 0.001. The meaning of an X indicator is explained in paragraph 2.2.

2.4.3.2 Accuracy.

The accuracy of the R or G reading is ±0.1% of the reading ±0.005% of full scale (which is ±1/2 of the last digit) on all but the lowest R and highest G ranges where the accuracy is ±0.2% of the reading ±0.005% of full scale.

On the lowest R range the residual resistance of the bridge (approximating 0.9 mΩ) should be subtracted from the measured resistance. Use short, heavy leads to connect the unknown resistor, measure the resistance of these leads by connecting the free ends together, and subtract this value from the measured value.

Residual inductance and capacitance affect only the Q of the resistor. Corrections for these effects are given in Table 2-5. When resistors with high Q's are measured, an additional error term of 0.1%Q is added to the specification (refer to paragraph 1.5.3). This term is practically negligible when Q is less than 0.2.

2.4.4 MEASUREMENTS USING INTERNAL GENERATOR AT FREQUENCIES OTHER THAN 1 KC.

If an oscillator-detector tuning unit other than the 1-kc unit usually supplied is used, the operating procedure is the same as for 1-kc measurements, but the accuracy specifications and D and Q ranges are the same as those for an external generator at the same frequency (refer to Section 2.5). The plug-in unit gives the DQ multiplier required for the various bridges so that it does not have to be calculated (refer to paragraph 2.5.1).

2.4.5 NOTES ON AC MEASUREMENTS.

2.4.5.1 Capacitance to Ground.

The Type 1608-A Impedance Bridge generally measures "ungrounded" components, since neither UNKNOWN terminal is connected directly to the panel, which should be grounded except for measurements on grounded components (refer to paragraph 3.5). Capacitance from the LOW UNKNOWN terminal is placed directly across the detector (see Figure 2-3) and does not cause an error, but can, if large enough, cause a reduction in sensitivity. Capacitance from the other UNKNOWN terminals shunts an arm of the bridge and therefore causes an error which can be significant if the stray capacitance is large enough. Table 2-6 gives the error caused by a stray capacitance for each quantity measured.

Note that for the capacitance bridges stray capacitance causes a small capacitance error. Since C_t is 0.15 μf, it takes a stray capacitance of 150 pf to cause

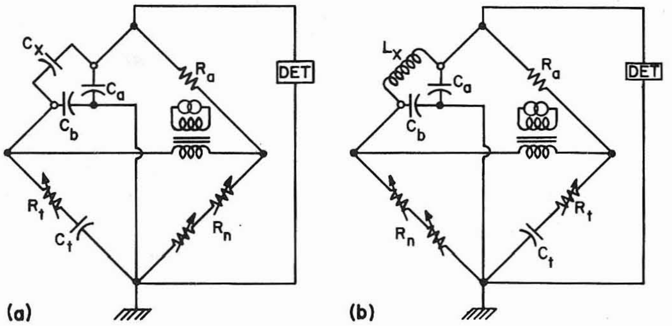

Figure 2-3. Capacitance and inductance bridge diagrams, showing capacitances to ground.

TABLE 2-6
CORRECTION TERMS FOR ERRORS CAUSED BY CAPACITANCE TO GROUND (C_b)

(Add or subtract from measured value as indicated.)

$C_t = 0.15\ \mu f$, $R_t = 6.67\ k\Omega$

$R_n = 0.667 \times$ (centade reading*)

C_s	$+\dfrac{C_x C_b}{C_t}(1-D_x^2)$	C_p	$+\dfrac{C_x C_b}{C_t}$
D (low)	$-\dfrac{C_b}{C_t} D_x(1+D_x^2)$	D (high)	$-\dfrac{C_b}{C_t} D_x$
G_p	NO ERROR	R_s	$+\omega C_b R_n R_x Q_x$
Q (cap)	$+\omega C_b R_t$	Q (ind)	$-\omega C_b R_n$
L_s	$\dfrac{+\omega C_b R_n L_x}{Q_x}$	L_p	$\dfrac{+\omega C_b R_n L_x}{Q_x}$
Q (low)	$-\omega C_b R_n Q_x^2$	Q (high)	$-\omega C_b R_n Q_x^2$

*omitting decimal point; e.g., for a centade reading of 10.000, $R_n = 6670\ \Omega$.

a 0.1% error. Note also that for the other bridges, C_b causes an error in Q only, except when low-Q inductors or high-Q resistors are measured.

Measurements made with the unknown grounded are discussed in paragraph 3.5 and measurements on three-terminal, shielded components are discussed in paragraph 3.2.

2.4.5.2 Voltage on Unknown. The voltage applied to the bridge is approximately 1 volt with a source impedance of 50 ohms when the GEN LEV control is fully on. The actual ac voltage on the unknown can be calculated with the aid of Table 2-7 and the circuit diagram of Figure 1-2, or it can be measured with a high-impedance voltmeter (which should be removed when high-impedance measurements are made in order to avoid shunting the unknown).

2.4.5.3 AC Sensitivity. The generator-bridge-detector system is sensitive enough to balance the bridge to the stated accuracy specifications. However, there are cases where additional sensitivity may be useful, such as measuring accurate D or Q when the main CGRL adjustment is at the low end of its range or when the signal level on the unknown must be set at some low level. In these cases an external detector following the internal detector may be of use. The Type 1232-A Tuned Amplifier and Null Detector is recommended. It should be connected to the DET OUT terminals.

When very low impedances are measured, there may be enough inductive hum pickup to limit the sharpness of the null. This is caused primarily by harmonics of the power-line frequency that are close enough to the tuned frequency to pass through the selective detector. In some cases a small "beating" on the meter may be noticed; this is a beat between harmonics of the oscillator and line. An oscilloscope connected to the DET OUT terminals may be used to advantage in such cases. If the oscilloscope is set to synchronize with the power line, the voltage at the line frequency and its harmonic will be a fixed display pattern and the bridge output signal will be a time-varying display. The final bridge balance adjustments should be made to remove any time-varying component from the oscilloscope display.

TABLE 2-7
BRIDGE COMPONENT RATINGS

FULL-SCALE RANGE setting				Ra Value	Ra Max Voltage	Ra Max Current
C	G	R	L			
1100 μf	1100 m℧	1100 mΩ	1100 μh	1 Ω	0.71 v	710 ma
110 μf	110 m℧	11 Ω	11 mh	10 Ω	2.2 v	220 ma
11 μf	11 m℧	110 Ω	110 mh	100 Ω	7.1 v	71 ma
1100 nf	1100 μ℧	1100 Ω	1100 mh	1 kΩ	22 v	22 ma
110 nf	110 μ℧	11 kΩ	11 h	10 kΩ	71 v	7.1 ma
11 nf	11 μ℧	110 kΩ	110 h	100 kΩ	220 v	2.2 ma
1100 pf	1100 n℧	1100 kΩ	1100 h	1 MΩ	500 v	0.7 ma

CENTADE - R_n (R1): 30 ma
STANDARD RESISTOR R_t (R3): 58 v, 86 ma.
STANDARD CAPACITOR, C_t (C1): 600 v peak (425 v rms).
DETECTOR INPUT CAPACITOR (C556): 400 v peak (280 v rms).

2.4.5.4 Effect of Level on Iron-Cored Inductor Measurements. Iron-cored inductors are nonlinear devices whose inductance depends on the level of the applied voltage. If measurements are to be repeatable, the signal level must be specified. The "initial permeability" inductance, or inductance at "zero level", is often used as a reference (as on General Radio Type 1481 Inductors). To obtain this value, plot L vs applied voltage and extrapolate to zero voltage. The GEN LEV control permits such measurements, and it is often useful to make a level change in order to see if the unknown inductance depends on the signal level.

2.4.6 DIFFERENCES BETWEEN AC AND DC RESISTANCE MEASUREMENTS.

2.4.6.1 General. The ac resistance bridge of the Type 1608-A Impedance Bridge provides a means for extending the range and sensitivity of resistance measurements over that possible with dc, without using a higher applied voltage or a sensitive dc amplifier. The ac resistance of a resistor can differ from the dc value for a number of reasons. However, most of those are negligible at 1000 cps, and in some cases the use of ac avoids undesirable effects that can cause errors in dc measurement.

2.4.6.2 Frequency Effects.

a. Series Inductance and Parallel Capacitance. At audio frequencies almost all resistors except those of very high value (see b and c below) can be accurately represented by the equivalent circuit of Figure 2-4. In this circuit the resistor is a pure resistance and equal to the low-level dc value unless some other effect is appreciable. If we let $Q_L = \frac{\omega L}{R}$ and $Q_c = \omega R_c$, then the effective series resistance of this equivalent circuit is

$$R_s = \frac{R}{1 - 2Q_cQ_L + Q_c^2 + Q_c^2Q_L^2} \qquad (1)$$

and the effective parallel conductance is

$$G_p = \frac{1}{R} \times \frac{1}{1 + Q_L^2} \qquad (2)$$

Low-valued resistors have a completely negligible Q_c but Q_L can become appreciable, particularly for wire-wound resistors. Since Q_c is negligible, the value of R_s is equal to the dc value, but the value of G_p is not equal to $\frac{1}{R_{dc}}$. However, on the Type 1608-A, if the resistor is inductive, it can be balanced only on the R_s bridge, where there is no error.

High-valued resistors have a negligible Q_L but Q_c is appreciable even if the parallel capacitance is small. If the unknown resistor is capacitive, it can be measured only on the G_p bridge where there is no error due to lumped parallel capacitance.

It is conceivable that both Q_L and Q_c could be large enough to have an appreciable effect in the middle

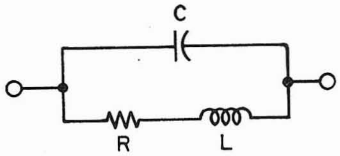

Figure 2-4 Resistor equivalent circuit.

resistance range, so that both R_s and G_p would differ appreciably from the dc values. However, it is highly unlikely that a component designed as a resistor would have the required inductance and capacitance (although a large air-cored inductor could). A 1-kilohm resistor would have to have a 5000-pf shunt capacitance to produce a 0.1% error from the $Q_c{}^2$ term in equation (1) and a 5-mh series inductance to produce a 0.1% error from the $Q_L{}^2$ term in equation (2). The product Q_cQ_L is equal to $(\frac{f}{fo})^2$ where fo^2 is the resonant frequency $(\frac{1}{2\pi LC})$. To produce a 0.1% error at 1 kc from the $2Q_cQ_L$ term, the resonant frequency would have to be less than 45 kc.

b. Distributed Capacitance, "Boella Effect". For very high-value resistors an equivalent circuit consisting of a resistor and a single parallel lumped capacitor is not good enough. Actually, there is capacitance from every part of the surface of the resistor to every other part. As a result of this distributed capacitance, the real part of the admittance, or parallel conductance, G_p, is frequency-dependent. A rule of thumb for film-type resistors is that the equivalent parallel resistance will be reduced by approximately 10% when the product of the resistance in megohms and the frequency in megacycles is unity. Composition resistors have a somewhat larger change. At 1 kc this would mean a 10% change at 1000 MΩ or, since the error is roughly proportional to R_1, the error would be approximately 0.1% at 10 MΩ. The Type 1608-A has 0.15% accuracy at 100 $m\mu\mho$ (10 MΩ) and reduces to 5% at 1 $m\mu\mho$ (1000 MΩ). Therefore, this effect is just barely noticeable at the extreme of the G_p range for most resistors.

c. Distributed Capacitance to Bridge Case. If there is distributed capacitance from the body of the resistor to a third (guarded) terminal, such as the cabinet of the Type 1608-A Bridge, the effective measured parallel conductance, G_p, will decrease with frequency. The expression :

$$G_p = \frac{1}{R} \frac{1}{1 + \frac{\omega^2 R^2 C^2}{50}}$$

gives the first error term. At 1 kc,

$$G_p \simeq \frac{1}{R} \frac{1}{1 + R^2C^2 \times 10^6}$$

where R is in MΩ and C is in pf. This gives a 1% error when R = 100 MΩ and C = 1 pf. This effect is just noticeable if a large resistor is spaced very close to the bridge panel, and causes no measurable error if the unknown is spaced away from the panel and other grounded conductors.

d. Magnetic Coupling - Iron Loss. If the resistor is wire-wound and is placed near a conductor, currents may be induced in the inductor, and the resulting eddy current losses (and hysteresis loss if iron) will be equivalent to a resistor shunting the unknown. This effect is completely negligible in resistors, but is the main reason why the ac and dc resistances of transformers differ. The effect is hardly noticeable on high-frequency ferrite-cored chokes measured at 1 kc.

e. Skin Effect. This is completely negligible at 1 kc. The error would be worse for heavy wire and at 1 kc the error would be less than 10 ppm for 50 mil (No. 16) wire.

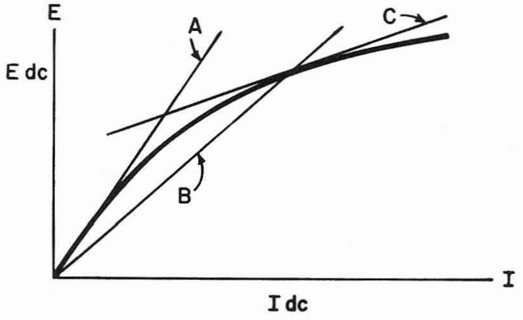

Figure 2-5. Resistance of nonlinear resistor.

2.4.6.3 Level Effects.

a. Power Dissipation. The measured ac and dc resistance of a resistor could differ if the power level for the two measurements were different, resulting in different resistor temperatures. Generally, ac bridges are more sensitive than dc bridges and therefore require less applied power for equal precision. Therefore, the ac measurement would usually give a more accurate measurement of low-level resistance.

If the thermal time constant of the resistor being measured is not very long compared with the period of the ac signal, the resistance could change during the ac cycle, giving an ac value that is frequency-dependent. This effect would rarely be noticeable at 1 kc.

b. Nonlinear Resistors. If a resistor is nonlinear, as is the resistance curve of Figure 2-5, there are several different ways of specifying resistance. Line A is the low-level resistance which could be more easily measured using ac because of the higher sensitivity of ac bridges. Line B is the dc resistance at a given voltage, E_{dc}. Another value, line C, is the incremental value using a low-level ac signal superimposed on a dc bias (refer to paragraph 3.1.3).

c. Thermal Voltages. If the two connections to the unknown are not at the same temperature, a small dc thermocouple voltage is induced that can cause an error in dc measurements. The error varies with the applied dc level.

2.5 AC MEASUREMENTS WITH EXTERNAL GENERATOR.

2.5.1 PROCEDURE. The procedure for making measurements with an external generator is the same as that with the internal 1-kc oscillator except for the following:

a. Connect the external oscillator to the instrument as described in paragraph 2.5.3. (Note that the GEN LEV control does not control the level of an externally applied signal.)

b. Set the function switch to EXT AC (this connects the EXT GEN terminals to the bridge input transformer and switches the detector to a flat frequency characteristic).

c. Multiply the D and Q readings by the following factors to determine the value at the test frequency, f.

Bridge		Multiplying Factor	
C_s	LOW D	f/1 kc	
C_p	HIGH D	1 kc/f	
G_p	Q	f/1 kc	
R_s	Q	f/1 kc	
L_s	LOW Q	~~1 kc/f~~	f/1KC
L_p	HIGH Q	~~f/1 kc~~	1Kc/f

LBR
2-4-77

If the presence of a nonlinear unknown causes distortion in the detector, the best meter null may not give the correct value. Also, excess noise may limit the null obtainable. Earphones (connected to the DET OUT terminal) are helpful in distinguishing a null at the fundamental frequency, or an external selective amplifier, such as the Type 1232-A Tuned Amplifier and Null Detector, can be used. In extreme cases, distortion or noise could have enough amplitude to overdrive the internal detector when the function switch is at EXT AC and could thus give erroneous readings on a selective detector connected to the DET OUT terminals. In such cases, the external detector should be connected from the LOW UNKNOWN terminal to panel ground.

2.5.2 ACCURACY. The accuracy of measurements made with an external generator is the same as that with the internal oscillator except that the following frequency-dependent terms are added to the specifications:

L and C measurements:

$$\pm 0.001\% \left(\frac{f}{1\,kc}\right)^2, \quad \pm 0.1\%\, D \frac{f}{1\,kc}$$

R and G Measurements:

$$\pm 0.002\% \left(\frac{f}{1\,kc}\right)^2, \quad \pm 0.000001 \left(\frac{f}{1\,kc}\right)^4$$

These extra terms and the total error are shown diagrammatically in Figures 1-5 and 1-6. In order to achieve this accuracy, it is necessary to correct for the effect of the residual impedances of the terminals and connecting leads, which become more important at higher frequencies (refer to paragraph 2.5.7).

The percent D or Q error is 5% for L and C measurements at any frequency, but the fixed error term becomes $0.0005 \frac{f}{1\,kc}$ or 0.0005, whichever is larger. For R_s and G_p measurements the Q accuracy is ±2% ±0.0005 f/1 kc. For large applied voltages, a somewhat larger Q error may be caused by saturation of the phase-compensating inductor. This error may be as large as 0.005 f/1 kc.

2.5.3 CONNECTION OF EXTERNAL GENERATOR. In most cases when an external generator is used it should be connected to the EXT GEN terminals. In this connection, the external generator is connected directly to the internal bridge transformer when the function switch is in the EXT AC position, and the low generator terminal is connected to the bridge chassis (which should be grounded; refer to paragraph 2.1.2). A second ground connection to the generator should be avoided.

If the external generator can be overdriven when connected to a low-impedance load, it is generally desirable to place a resistor in series with the ungrounded generator connection to the bridge. This resistor should be large enough to prevent distortion even when the bridge input is short-circuited. The bridge input impedance at the EXT GEN terminals is a minimum of 30 ohms (resistive) at 1 kc when the bridge is set to measure a short circuit on the UNKNOWN terminals. This is shunted by the inductance of the primary of the bridge transformer, which is approximately 0.25 henry.

In some cases where more input power is required, particularly in measurements of low impedance, a matching transformer between generator and bridge is useful. This transformer need not be shielded.

When the desired bridge voltage is higher than can be applied by the internal bridge transformer, the generator can be connected directly in the bridge circuit by connection to the BIAS terminals (be sure to open the jumper strap). See Figure 2-6a. In this connection, the generator is ungrounded, and capacitance from its terminals to ground must be considered. Capacitance from the negative BIAS terminal to ground can cause a large error at high frequencies when low impedances are measured. Therefore, use a shielded cable and use the outer conductor to connect the low generator terminal to the positive BIAS terminal. Capacitance of over 100 pf from the positive BIAS terminal to ground can cause appreciable error (refer to paragraph 2.4.5.1). A bridge transformer can be used to connect a generator to the BIAS terminals, but this has no advantage over the use of the internal bridge transformer unless the external transformer has a higher voltage rating, as do the Type 578 Transformers (see Figure 2-6b).

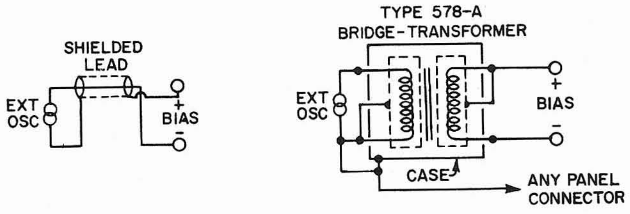

Figure 2-6. Methods of applying external ac.

2.5.4 MAXIMUM APPLIED AC VOLTAGE.

The maximum ac voltage that may be applied to the Type 1608-A Bridge Impedance depends on:

a. the voltage and power ratings of each component (including the unknown),

b. the bridge circuit used,

c. the range used,

d. the position of the variable components,

e. the method of applying the voltage.

Exact limits for any specific measurement can be calculated from the data of Table 2-7 and the circuit diagrams of Figure 1-2. If such a maximum voltage is applied, care must be taken to avoid any adjustments of the panel controls that would result in an overload.

A much simpler approach is to limit the power into the bridge to 1/2 watt so that no bridge components can be damaged under any conditions. If the power rating of the unknown is less than 1/2 watt, the input power should be reduced accordingly. A series resistor is the simplest way to limit the power. It should have a value of $R = \frac{E^2}{4P}$, where E is the open-circuit generator voltage and P the power rating of the unknown component.

The input transformer imposes the following further limit on the voltage applied to the EXT GEN terminals:

$$\text{Emax} = \frac{f}{5} \text{ volts (f in cps), or 100 volts,}$$

whichever is larger. This transformer has a 3-to-1 step-down ratio and an equivalent resistance, referred to the primary, of 20 ohms. Therefore, to limit the power applied to the bridge to 1/2 watt, a series resistor of $\frac{E^2}{2} - 20\Omega$ should be placed in series with the external supply.

2.5.5 D AND Q RANGES VS FREQUENCY.

The D and Q ranges are functions of frequency. Also, at frequencies above 1 kc, the whole D and Q range cannot be used without serious error in the C, G, R, or L reading. The solid lines of Figure 2-7 give the over-all ranges of the D or Q adjustments for the various bridges. The shaded

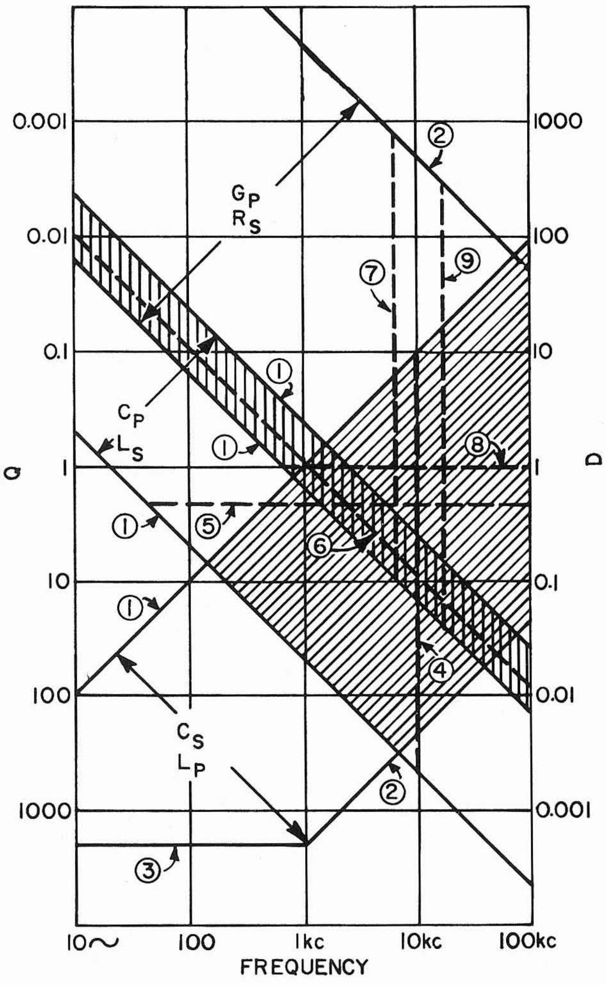

Figure 2-7. D and Q ranges vs frequency.

areas show where the ranges of two bridges overlap and in the cross-hatched area all three bridges could be used.

Superimposed in this plot are heavy dashed lines which show where an extra 0.1% error occurs on the C, G, R, or L reading due to one of the frequency or D or Q dependent error terms (refer to Section 1.5).

The numbers on the various lines refer to the explanation below:

1. end of the adjustment (full scale),
2. first division of the adjustment (100% D or Q error),
3. 100% D or Q error (0.0005) at low frequency (no C, G, R, or L error),
4. the 0.001% $(\frac{f}{1\ \text{kc}})^2$ error in L and C,
5. the 0.5% D^2 error in L and C,
6. the 0.1% D $(\frac{f}{1\ \text{kc}})$ error in L and C,
7. the 0.002% $(\frac{f}{1\ \text{kc}})^2$ error in G and R,
8. the 0.1% Q error in G and R,
9. the 0.000001% $(\frac{f}{1\ \text{kc}})^4$ error in G and R (this error becomes large quickly above this line).

2.5.6 EXTENDING D AND Q RANGES AT LOW FREQUENCIES.

Below 140 cps part of the DQ range is not covered by any of the bridges of the Type 1608-A. In this range, an external adjustment can be used to extend the D or Q range of the various bridges. For the C_s, C_p, L_s, and L_p bridges, this adjustment should be a decade resistance box or a calibrated rheostat connected to the EXT DQ terminals of the bridge. For the C_p and R_s bridges, a decade capacitance box should be connected from either EXT DQ terminal to chassis (the two terminals should be shunted together).

The readings on the external adjustments can be converted to give D or Q by means of the following formulas where R is in kΩ, f in kc, and C in μf:

C_s bridge, LOW D

$$D = f(\text{internal dial reading} + 0.942\ R_{EXT})$$

C_p bridge, HIGH D (set internal dial to read 0.02)

$$D = \frac{1.091}{f(R_{EXT} + 0.536)}$$

G_p bridge, capacitive Q

$$Q = f(\text{internal adjustment reading} + 41.9\ C)$$

R_s bridge, inductive Q

$$Q = f(\text{internal adjustment reading} + 41.9\ C)$$

L_s bridge, LOW Q

$$Q = f(\text{internal dial reading} + 0.942\ R)$$

L_p bridge, HIGH Q (set internal dial to read ∞)

$$Q = \frac{1.091}{f\ R_{EXT}}$$

2.5.7 CORRECTIONS FOR RESIDUAL AND LEAD IMPEDANCES.

At high frequencies, the errors resulting from the residual bridge impedances and from the connecting lead impedances become more important, often requiring corrections. Corrections are given in Table 2-5. These corrections give the first-order terms only, and in the corrections, the measured value of the unknown is assumed equal to the true value of the unknown, and either value may be used to evaluate the error.

SECTION 3

SPECIAL MEASUREMENTS

3.1 APPLICATION OF DC BIAS TO UNKNOWN.

3.1.1 APPLICATION OF DC BIAS TO CAPACITORS (OPERATION WITH INTERNAL OSCILLATOR). Up to 600 volts of dc bias may be applied to the unknown capacitor by any of several methods. The simplest method can be used only for measuring series capacitance; fortunately, this is how most capacitors are specified.

WARNING

> Charged capacitors form a shock hazard, and care should be taken to ensure personal safety during measurement and to be sure that the capacitors are discharged after measurement. The external dc supply should also be carefully handled and connecting leads insulated wherever possible.

It is advisable to limit the power that can be drawn from the external dc supply to 1/2 watt (by a resistor, fuse, or circuit breaker) in order to protect the bridge components in case the unknown is short-circuited.

The various methods of applying dc bias to capacitors are described below, along with suggestions for their use:

Method 1. C_s Bridge (see Figure 3-1a).

With this method up to 600 volts can be applied on any range. Connect the negative terminal of the unknown capacitor (if polarized) to the LOW UNKNOWN terminal. The dc supply should have a low ac output impedance. For this method of bias the bridge and the dc supply do not have a common ground and one must be left floating. This problem is discussed in paragraph 3.1.5.

Method 2. C_p Bridge (see Figure 3-1b).

This method is the same as Method 1 above, except that a large blocking capacitor is placed in the standard bridge arm to prevent direct current from flowing through the D adjustment rheostat. Connect this capacitor, C_y of Figure 3-1, between the EXT DQ terminals, with the positive terminal connected to the upper terminal.

Since this capacitance is not infinite, there will be an error in the measured value of C_x and D_x. The true values can be calculated from the following formulas:

$$C_x = C_{measured}\left(1 + \frac{C_t}{C_y} D_x^2\right)$$

$$D_x = D_{measured}\left(1 - \frac{C_t}{C_y} D_x^2\right)$$

Method 3. C_s or C_p Bridge. Small Capacitors (see Figure 3-1c).

This method is recommended for small capacitors. The maximum voltage that can be applied depends on the bridge range as given in Table 3-1. The "Max DC Current" column is correct only for the C_s bridge unless a blocking capacitor, C_y (see Figure 3-1b), is used with the C_p bridge. If no blocking capacitor is used, the maximum direct current will depend on the DQ rheostat setting, but the full current indicated can be applied on the three lowest capacitance ranges.

The advantage of this method is that both the dc source and the bridge are grounded and that the dc can easily be limited by a series resistor since the imped-

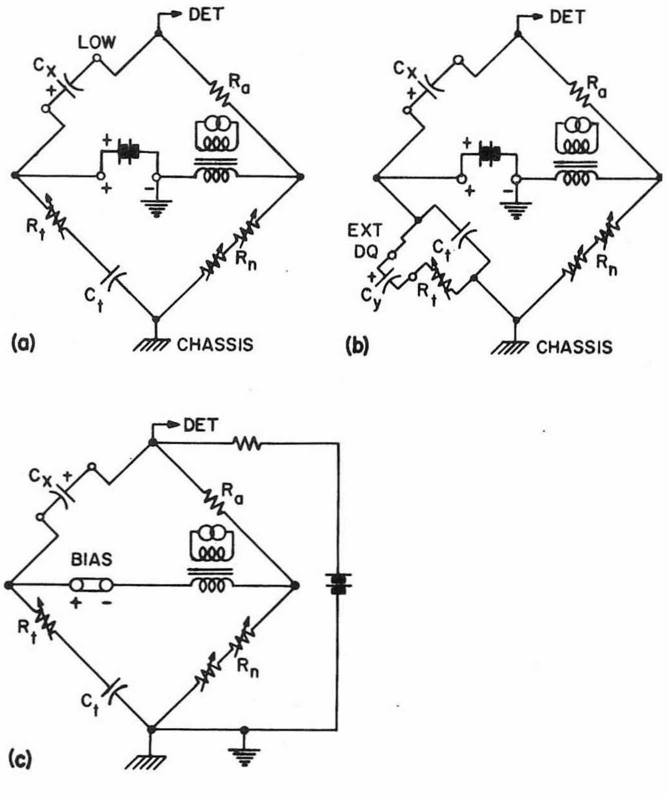

Figure 3-1. Methods of applying dc bias to capacitors.

ance of the dc source should be high (above 10 kΩ) to avoid shunting the detector. The dc source should have low hum on its output because it is tied to the detector input. External filtering on the dc source may be required, but is relatively easy to obtain when the required current is small.

WARNING

> Note that the LOW UNKNOWN terminal has high voltage applied to it in this method of biasing capacitors.

TABLE 3-1
MAXIMUM VOLTAGE APPLIED TO CAPACITORS BY METHOD 3*

RANGE	MAX VOLTS ON UNKNOWN	MAX DC CURRENT
1100 pf	393 v	0.39 ma
11 nf	220 v	2.2 ma
110 nf	71 v	7.1 ma
1100 nf	22 v	22 ma
11 μf	3 v	30 ma
110 μf	0.3 v	30 ma
1100 μf	0.03 v	30 ma

*Methods 1 and 2 allow 600 v to be applied to all capacitors

3.1.2 APPLICATION OF DIRECT CURRENT TO INDUCTORS (OPERATION WITH INTERNAL OSCILLATOR). Direct current can be applied to inductors during measurement by several different methods to permit incremental inductance measurements. The various methods are described below along with suggestions for their use. An external blocking capacitor, C_y in Figure 3-2a, is needed only for measurements on the L_s bridge. It should be connected between the EXT DQ terminals with its positive terminal connected to the upper of the two bridge terminals. There is a slight error due to the finite size of this capacitor, and the true value of L_x and Q_x can be calculated from the measured values by the following formulas:

$$L_x = L_{measured}\left(1 + \frac{C_t}{C_y}\frac{1}{Q_x^2}\right)$$

$$Q_x = Q_{measured}\left(1 + \frac{C_t}{C_y}\frac{1}{Q_x^2}\right)$$

WARNING

> Large inductors carrying high current are shock hazards because of the high voltage induced if the connections are broken. Reduce the dc to zero before disconnecting the dc supply of the unknown inductor.

Method 1. (see Figure 3-2a) 30 ma max.

This method is preferred because both the dc supply and bridge are grounded and up to 30 ma may be applied to large inductors. At the 30-ma level there is an added 0.03% error in inductance and there may be a D $\left(\frac{1}{Q}\right)$ error as large as 0.001.

The resistor in series with the supply should be large enough to avoid shunting the detector, and to keep the dc constant as the bridge adjustment is made. Connect the capacitor C_e between the BIAS terminals, with its positive terminal connected to the black BIAS terminal. The voltage rating of this capacitor should be greater than the IR drop in the inductor. The voltage rating of the capacitor C_y (L_s bridge only) should be greater than Idc x 7.6 kΩ. (7.6 k is the maximum value of the adjustable bridge arm). If the dc supply has high hum, external filtering may be necessary.

Method 2. (see Figure 3-2b) High Current in Small Inductors.

This method permits higher currents in small inductors because the current is fed through the ratio arm resistor R_a, which is small on the lower inductance range. The maximum current is limited to that given in Table 3-2.

The dc supply is connected between the BIAS terminals with the positive supply terminal connected to the black BIAS terminal in order to keep the bridge case and dc supply at zero volts dc from ground. The blocking capacitor C_y (necessary only on the L_s bridge) must take the full dc voltage applied.

With this method of bias, the bridge and the dc

TABLE 3-2
MAXIMUM CURRENT THROUGH INDUCTORS (METHOD 2) AND RESISTORS (METHODS 2 & 3)

RANGE		MAXIMUM CURRENT	RATIO ARM (R_a)
L BRIDGE	R BRIDGE		
1100 μh	1100 mΩ	100 ma	1 Ω
11 mh	11 Ω	100 ma	10 Ω
110 mh	110 Ω	71 ma	100 Ω
1100 mh	1100 Ω	22 ma	1 kΩ
11 h	11 kΩ	7.1 ma	10 kΩ
110 h	110 kΩ	2.2 ma	100 kΩ
1100 h	1100 kΩ	0.4 ma	1 MΩ

supply do not have a common ground and one must be left floating. This problem is further discussed in paragraph 3.1.5.

Method 3. Large Currents (Figure 3-2c).

This method must be used for very large currents and the bridge does not limit the amount of current applied, since none of the current flows in the bridge. The ac source impedance of the dc supply must be very high, since it is in parallel with the unknown. An inductor, L_a, very large compared with the unknown, may be used. Often it is possible to resonate this shunt inductor to increase the source impedance still further. The impedance of the blocking capacitor, C_f, must be low compared with the unknown since it is in series with it. If the dc supply is grounded there will be a dc voltage between the bridge chassis and ground, equal to I_{dc} (dc resistance of L_x).

The same grounding difficulties are present for this method as are present for Method 2 above.

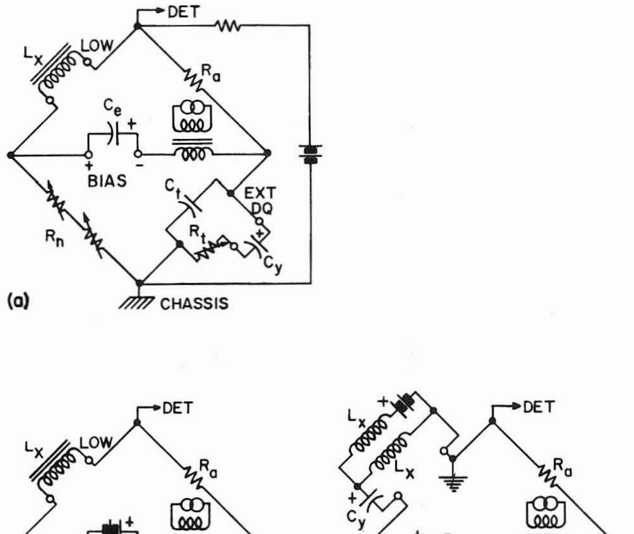

Figure 3-2. Methods of applying dc to inductors.

3.1.3 DC BIAS FOR AC RESISTANCE MEASUREMENTS (OPERATION WITH INTERNAL OSCILLATOR). A dc bias voltage and current may be applied to various types of nonlinear resistive elements such as diodes, varistors, and thermistors in order to measure the incremental resistance. For voltage-sensitive devices, the ac resistance is the slope of the dc voltage-current characteristic. For thermally sensitive devices the ac resistance is equal to the dc value if the same total power is applied in both cases (as long as the thermal time constant is much longer than the period of the signal).

Method 1. (see Figure 3-3a).

This method is preferred because the bridge and dc source are both grounded and all the applied current flows through the unknown. A maximum current of 30 ma may be applied to the unknown resistors. The total voltage applied to the bridge should not exceed 400 volts.

The impedance of the blocking capacitor, C_d, should be small compared with that of the unknown resistor (this may be difficult when R_x is small), and the voltage rating of C_d must be greater than the IR drop of the unknown resistor. The voltage rating of capacitor, C_e, connected to the BIAS terminals should be greater than I_{dc} x 7.6 kΩ and the capacitance should be over 50 μf. A resistor should be placed in series with the dc supply to avoid shunting the detector with a low ac impedance.

A variation in this method is to short-circuit the two blocking capacitors, C_d and C_e. Then the current through the unknown will be $I_{input} (\frac{R_a}{R_a + R_x})$, where R_a is given in Table 3-2, and the voltage and current limits of Table 2-7 apply.

Method 2. (see Figure 3-3b).

This method can be used to get higher currents through small unknown resistors, and the current limit for each range is given in Table 3-2. The maximum voltage is limited to 71 volts. Also, this method avoids the use of a capacitor in series with the unknown or ratio arm.

In this method the current through the unknown is the total current multiplied by $(\frac{R_t}{R_a + R_t})$, where R_t is 6667 ohms and R_a is given in Table 3-2. On the lower ranges this ratio is near unity.

Also, for this method the bridge and dc supply do not have a common ground and one must be left floating. This problem is discussed in paragraph 3.1.5. There is a dc potential difference between the chassis and the negative terminal of the dc supply that varies with the adjustment of the CGRL control up to a maximum of 37 volts.

Method 3. (see Figure 3-3c).

This method is very similar to Method 2 but here all the current flows through the unknown and a very low-impedance dc supply is required. If the dc supply has high ac output impedance, it should be shunted with a large capacitor since it is in series with the unknown resistor.

With this method the bridge and dc supply do not have a common ground and one must be left floating. This problem is discussed in paragraph 3.1.5. There will be a dc potential between the chassis and negative terminal of the dc supply, equal to approximately $I_{dc}\ R_a$.

Method 4. (see Figure 3-3d).

With this method any amount of dc may be supplied to the unknown resistor because none of the current flows through the bridge and the applied voltage is limited only by the voltage rating of the blocking capacitor.

Here the dc supply shunts the unknown, and it is necessary to use a series resistor or inductor with an impedance much larger than that of the unknown. Therefore, this method is limited to relatively small resistors. Also, for this method there is a grounding problem since the bridge and the dc supply do not have a common ground. See paragraph 3.1.5. There will be a dc potential between the chassis and negative terminal of the dc supply, equal to approximately $I_{dc}\ R_x$.

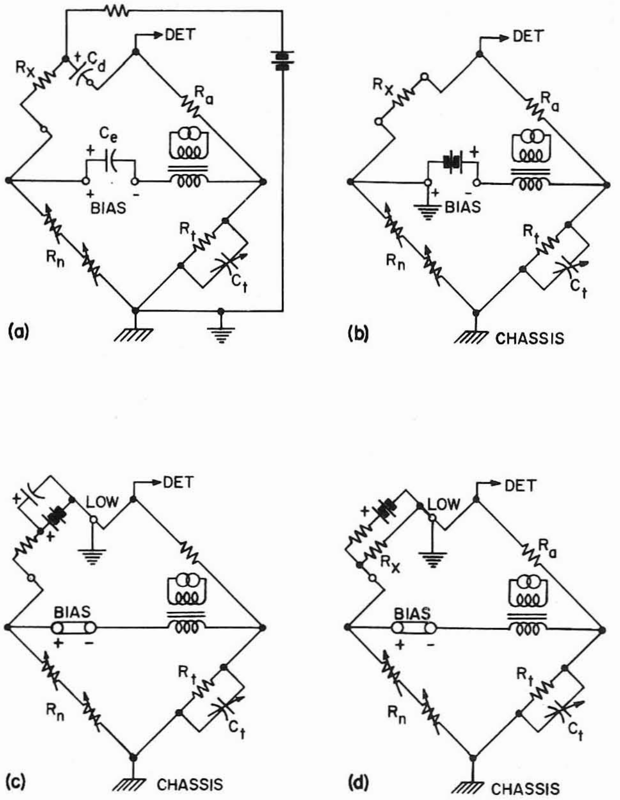

Figure 3-3. Methods of applying dc to resistors for ac resistance measurements.

3.1.4 APPLICATION OF DC BIAS WITH EXTERNAL AC GENERATOR.

When an external generator is used, the grounding problem (see paragraph 3.1.5) becomes even more serious since the internal detector is not selective in the EXT AC position and the hum pickup is unattenuated. In many cases it will be necessary to use an external selective detector, such as the Type 1232-A Tuned Amplifier and Null Detector. In some cases the induced hum may overload the internal detector, causing erroneous readings, in which case the external detector should be connected between the LOW UNKNOWN terminal and the bridge panel rather than to the DET OUT terminals. In extreme cases, the bridge may be disconnected from the power line, thus removing all internal source of hum. This has the disadvantage of turning off all the indicator lights.

For those biasing methods where the dc supply and the bridge have a common ground, the external ac supply should be connected to the EXT GEN terminals which have the same common ground. With those methods that do not have a common ground between the bridge and dc supply, it is generally best to ground the external dc and ac supplies at the same point, as shown in Figures 3-4a and 3-4b, and unground the bridge. A resistor should be put in parallel with the ac generator to provide a dc path. When the bridge is floating and an external detector is used, this detector is also floating and should be battery operated (as is the Type 1232-A) to avoid additional hum pickup and capacitance to ground.

3.1.5 GROUNDING PROBLEMS WITH DC BIAS.

For those biasing methods described above that do not have a ground in common with the bridge chassis, it is necessary to float (unground) either the dc supply or the bridge. This results in two difficulties. First, there is

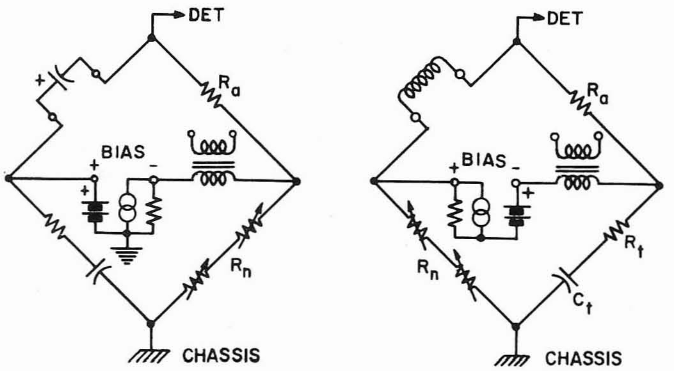

CAPACITANCE BRIDGE (METHOD 2)

INDUCTANCE BRIDGE (METHOD 2)

Figure 3-4. Connections of external ac and dc supplies.

capacitance from the floating bridge or power supply to ground, which can cause an error if it is placed across a bridge arm. Second, there is generally capacitive coupling between the floating bridge dc supply and the ac line, which causes hum pickup in the detector, resulting in a residual deflection.

If the dc supply is self-powered, it should be left floating and spaced away from any ground, and the bridge should be grounded. If the dc supply is line-operated, it will probably have more capacitance to ground and to the power line than has the bridge, and therefore the supply should be grounded and the bridge ungrounded. To disconnect the bridge from ground, open the link between the rear terminal labeled 3RD WIRE GROUND and the adjacent CHASSIS terminal. The 3RD WIRE GROUND terminal will be grounded if a three-wire power cord is used and should be grounded externally if a two-wire cord is used.

When the bridge is floating, there is approximately 300 pf between the case and the 3RD WIRE GROUND internally. External capacitance from the case to ground will increase this total value somewhat. If the BIAS terminals or the UNKNOWN terminal not marked LOW is grounded, this capacitance will be placed across the standard capacitor for capacitance measurements, across the fixed standard resistor, R, for conductance measurements, and across the CGRL adjustment for resistance and inductance measurements. The error due to this capacitance can be computed from the equations of Table 2-6. For 300 pf, the main errors are a 0.2% error in capacitance measurements, a Q error of - 0.013 for G_p measurements, a maximum Q error of + 0.013 for R_s measurements (dependent upon the CGRL counter setting) and a maximum D $(\frac{1}{Q})$ error of - 0.013 for inductance measurements (dependent upon the CGRL control setting).

If the bridge is grounded at the LOW UNKNOWN terminal, this capacitance is placed across the detector where it causes no error.

The residual deflection caused by hum pickup can seriously limit the accuracy obtainable, particularly if the detector is not selective as it is when an external generator is used (refer to paragraph 3.1.4). The hum pickup will be about the same when either UNKNOWN terminal or the BIAS terminals are grounded when low impedances are measured, but can be much worse when high impedances are measured and the LOW UNKNOWN terminal is grounded. Earphones may be helpful in detecting the null of the fundamental in the presence of hum. In extreme cases, the bridge can be disconnected from the power line and a battery-operated selective detector, such as the Type 1232-A Tuned Amplifier and Null Detector, can be used to avoid all internal hum pickup.

3.2 MEASUREMENTS ON SHIELDED THREE-TERMINAL COMPONENTS.

When the unknown component is shielded, and the shield is not tied to either unknown terminal, a three-terminal component is formed (see Figure 3-5). The impedance, Z, of the component itself is the direct impedance of the three-terminal system. To measure the direct impedance, connect the shield (third terminal) to the bridge chassis, using any grounded terminal or a ground lug held by the screw directly below the UNKNOWN terminals. Connect the UNKNOWN terminal with the larger capacitance to ground to the LOW UNKNOWN terminal, because capacitance from the other UNKNOWN terminal to ground may cause an error if it is large enough. See Table 2-6 and paragraph 2.4.5.1.

Often the shield of an inductor is not connected to either terminal. When the inductance and frequency are so low that stray capacitance across the inductor causes negligible error, the shield should be connected to the LOW UNKNOWN terminal. When the inductance (or frequency) is high, the effective inductance is increased because of the shunting capacitance. The error is + 100 ($\omega^2 L_x C_x$)% (refer to paragraph 2.4.2.2). To avoid an inductance error, the shield may be tied to the panel of the bridge. The inductor terminal that has the large capacitance to the shield should be tied to the LOW UNKNOWN terminal. A Q error results from the capacitance from the other UNKNOWN terminal to the shield (C_b in Figure 2-3) but a better measurement of L_x is possible (this connection does not affect the winding capacitance itself).

3.3 REMOTE MEASUREMENTS.

Because of the small effect of capacitance to ground, particularly for capacitance measurements (refer to paragraph 2.4.5.1), the unknown may be placed some distance from the bridge. At least one of the connecting leads should be shielded to avoid the errors due to capacitance between the leads shunting the unknown. The shielded lead should be connected to the LOW UNKNOWN terminal and its shield tied to the bridge chassis. The other lead may also be shielded, but this will increase the capacitance to ground, causing an error (see Table 2-6 and paragraph 2.4.5.1). When low-impedance meas-

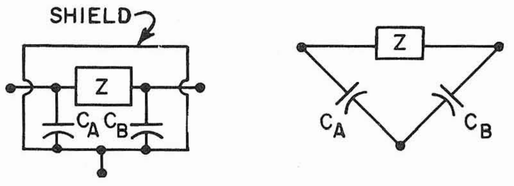

Figure 3-5. Shielded three-terminal impedance.

urements are made, the effects of lead resistance and inductance should be considered (see Table 2-5).

3.4 USE OF TYPE 1650-P1 TEST JIG.

3.4.1 GENERAL. The Type 1650-P1 Test Jig provides a means of making quick connections to the bridge with a pair of conveniently located clip terminals. When the Type 1650-A is set up for limit measurements (refer to paragraph 3.6), the combination facilitates the rapid sorting of electrical components.

The jig is also useful for measurements on small capacitors because of its small zero capacitance and because the unknown component is positioned and shielded to make repeatable measurements possible.

3.4.2 INSTALLATION. The test jig is connected to the bridge UNKNOWN terminals by means of the shielded Type 274 Connector attached to the jig. A three-terminal connection is necessary. The third connection is made by means of the screw, located directly below the UNKNOWN terminals, and the lug on the shield of the connector. This screw makes the ground connection to the jig and also holds the connector in place.

The leads of the test jig can be routed through cable clamps secured by the fluted panel screws so that the jig can be located directly in front of the bridge without interference from the leads.

3.4.3 RESIDUAL IMPEDANCES OF TEST JIG. The residual resistance of the leads is about 80 milliohms (total) and the inductance is about 2 μh. The zero capacitance, when the leads are connected to the bridge, is approximately 0.2 pf. The shielded leads cause a capacitance to ground of about 100 pf each. Corrections may be necessary for the residual resistance and inductance when measurements are made on low impedances (see Table 2-5). The capacitances to ground cause an error of 0.07% for capacitance measurements, but can cause a D $(\frac{1}{Q})$ error up to about 0.004 for inductance measurements (see Table 2-6).

3.5 MEASUREMENTS ON GROUNDED COMPONENTS.

If the component to be measured is grounded, the cabinet of the Type 1608-A must be disconnected from ground. To do this, open the link between the rear terminal labeled 3RD WIRE GROUND and the adjacent terminal tied to the chassis. The 3RD WIRE GROUND should be grounded externally if an ungrounded, two-wire power cord is used (refer to paragraph 2.1.2).

If the LOW UNKNOWN terminal is grounded there is no error due to the capacitance of the bridge to ground, but there is a residual meter deflection due to internal hum pickup in the bridge as well as external hum pickup to the bridge chassis which can usually be removed by grounding of nearby equipment. This hum pickup can become very large when high-impedance components are measured.

There is less hum pickup in the measurement of high-impedance components if the other (unlabeled) UNKNOWN terminal is grounded. However, the internal capacitance of the bridge chassis to ground (approximately 300 pf), plus any external capacitance from the chassis to ground, will shunt one arm of the bridge, causing an error given in Table 2-6.

Even when the bridge is floating, the bridge chassis can be used as a guard terminal for three-terminal or remote measurements.

3.6 LIMIT TESTING.

The Type 1608-A can be set up to provide a go-no-go indication useful for component setting. The panel meter is used as the indicator. The procedure is as follows:

a. Balance the bridge with one of the components to be measured (preferably one within tolerance).

b. Offset the CGRL setting by the desired tolerance, if the tolerance is symmetrical, or by one half of the total allowable spread if unsymmetrical.

c. Adjust the DET SENS control for five-division meter deflection.

d. Set the CGRL dial to the center value (the nominal value if the tolerance is symmetrical).

e. Connect each component to the bridge (or Type 1650-P1 Test Jig). If the meter deflection is less than five divisions, the component is within limits.

When the unknown has a tolerance greater than ±10%, the limits may be in error by more than 1% if the above method is used. A sure method is to set the CGRL dial so that unknown components at both limits give the same deflection.

3.7 MEASURING RESONANT FREQUENCY AND RESONANT IMPEDANCE OF TUNED CIRCUITS.

The resonant frequency of a series or parallel tuned circuit can be found with the use of an external variable-frequency oscillator. Either the G_p or R_s bridge may be used (depending upon the desired quantity). Connect the external generator to the EXT GEN terminals and set the function switch to EXT AC. Set the Q balance adjustment to zero, and null the bridge using the concentric CGRL controls and the frequency adjustment on the oscillator.

At null the bridge reads the effective R_s or G_p of the tuned circuit at that frequency where the tuned circuit is resistive. The resonant frequency is indicated by the variable-frequency oscillator. The accuracy of the R_s or G_p reading depends on the test frequency (refer to paragraph 2.5.5) and the accuracy of the resonant frequency depends on the Q of the tuned circuit, and is limited to the frequency change that would give a measurable change in the bridge Q adjustment ($\pm 0.0005 \frac{f}{1\text{ kc}}$, above 1 kc).

SECTION 4

PRINCIPLES OF OPERATION

4.1 BRIDGE CIRCUITS.

Figure 1-2 shows the six bridge circuits used in the Type 1608-A Impedance Bridge as well as the balance equations. These six bridges completely cover the passive half of the complex impedance plane as shown in Figure 4-1. There is considerable overlap between the D and Q ranges of the various bridges, allowing the measurement of series or parallel C or L over a wide range. L_s and C_p can each be measured over a full 90 degrees. The D coverage extends down to 0.02 (Q to 50), and at D's below 0.02 $L_p = L_s$ and $C_s = C_p$ to 0.04%, and at high D's or low Q's, the unknown can be measured as a resistance or conductance and L_s and C_p can be calculated from R or G and Q. Both ac and dc measurements can be made on the R and G bridges.

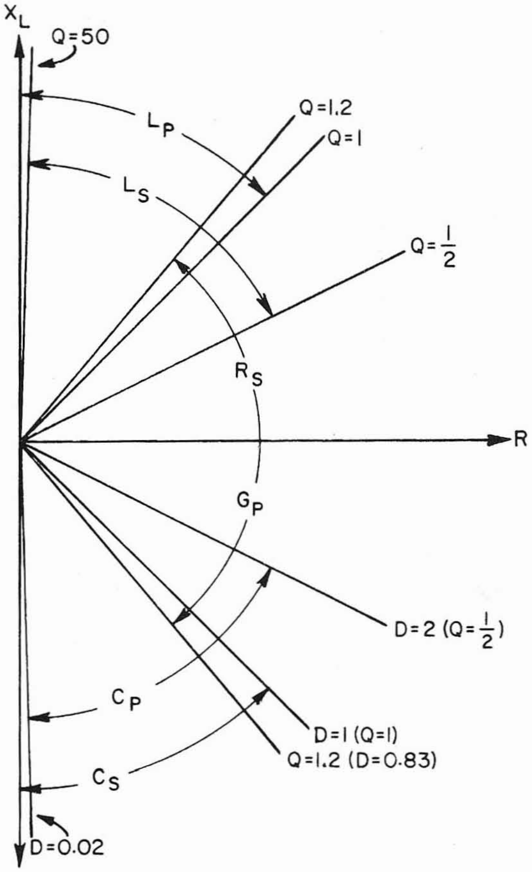

Figure 4-1. DQ coverage chart.

The coaxial CGRL balancing controls consist of a 114-position detented switch and a continuously adjustable vernier, wire-wound rheostat. The switch introduces in the variable bridge arm fixed steps of resistance proportional to the first three digits of the indicating counter that it drives. This adjustment is called a "centade," because it is similar to a decade-resistance unit but with approximately 100 positions. It uses precision wire-wound resistors (details of its operation are discussed in paragraph 4.4). The vernier sets the last two digits of the counter and adds resistance proportional to this reading in series with the resistance of the centade.

The ratio-arm resistors, which range from 1 ohm to 1 megohm, are all General Radio precision wire-wound resistors. The two ganged DQ adjustments are wire-wound rheostats with a 40-db logarithmic range.

The standard capacitor is specially constructed for low temperature coefficient. Most of its capacitance is that of a General Radio silvered-mica unit, which has a positive temperature coefficient of approximately 35 ppm. A small, stabilized, polystyrene capacitor is in parallel with the mica unit to reduce the over-all temperature coefficient.

4.2 BRIDGE SOURCES AND DETECTORS.

There are three dc sources of approximately 3.5, 35 and 350 volts open-circuit that are connected to the bridge for dc resistance and conductance measurements according to the schedule of Table 2-1. Resistors in series with these sources limit the power supplied to the bridge to less than 1/2 watt to avoid damaging the internal bridge resistors or the unknown.

The dc detector is a panel meter, with a sensitivity of 1 μa/mm near zero and a shaped characteristic to facilitate balancing. Its resistance is approximately 500 ohms. A more sensitive null indicator can be connected if desired, through connectors on the rear panel (refer to paragraph 2.3.4).

The ac generator is a 1-kc, two-stage, transistor RC oscillator. This drives a 3-to-1-stepdown shielded bridge transformer, with a maximum output of approximately 1 volt behind 50 ohms. The GEN LEV control adjusts the voltage to the primary of the transformer.

The ac detector is a high-gain transistor amplifier with a twin-T in a feedback loop for selectivity at 1 kc. The DET SENS control on the input adjusts the gain. The range switch causes the gain to be increased on the two extreme bridge ranges, and a compression circuit is used to reduce the necessity for constant readjustment of the DET SENS control during balance. This amplifier drives the panel meter and has an auxiliary DET OUT connection.

In the EXT DC position of the function switch, the EXT GEN terminals are connected across the vertical diagonal of the bridge (see Figure 1-3) (with no series resistor), and the internal dc detector is in place. When EXT AC is used, the EXT GEN terminals are connected directly to the bridge transformer (see Figure 1-3) and the twin-T is removed from the detector to give it a flat frequency characteristic.

When other plug-in frequency modules replace the 1-kc module supplied, the selective circuits for the oscillator and detector are changed to produce the desired signal frequency and to provide selective amplification at that frequency (refer to paragraph 2.4.4).

4.3 BRIDGE SWITCHING.

The FULL-SCALE RANGE switch (S1) changes the ratio-arm resistor of the bridge. Two separate rotors are used so that a clockwise rotation will increase the size of the unit for all six bridges. Both ends of the resistors are switched out, and the unused resistors are grounded to reduce stray capacitance. The range switch also positions the decimal point on the main readout, determines which dc supply will be used for dc G or R measurements and where the supply and meter will be connected to the bridge, and increases the ac gain on the extreme bridge ranges.

The BRIDGE SELECTOR switch (S2) switches the internal bridge components to form the six bridges of Figure 1-2. It also connects the appropriate set of rotors for the range switch, determines which type of unit is illuminated above the main readout, indicates the correct D or Q scale or type of resistance Q, and permits dc to be applied to the bridge only when it is in the G or R positions.

The function switch (S3) connects the appropriate generator and detector for internal and external ac and dc measurements. In the EXT DC position the EXT GEN terminals are connected directly to the bridge, and in the EXT AC position they are connected directly to the primary of the bridge transformer.

All switches used in the bridge have solid silver contacts, and double contacts are used on the range switch for low contact resistance.

4.4 CENTADE OPERATION.

The adjustment for the first three digits of the counter used as the CGRL readout places in the bridge circuit 114 precise steps of resistance. These steps increase or decrease continuously with no discontinuity in the switching, other than the increase or decrease from one fixed value to the other, in order to avoid sudden bridge unbalances that would momentarily deflect the panel meter. A binary scheme, using only seven resistors, could be switched to give 128 fixed values, but there would be many places over the range where two switching operations would have to occur at exactly the same moment to avoid a large transient. Or, 114 precision wire-wound resistors could be connected in series on a simple selector switch with a shorting rotor (as in a decade box) to give the desired operation, but would be quite expensive. To effect a 114-position decade-type switch (which we call a "centade") using fewer resistors, a scheme using three rotor contacts is used.

The operation of the centade is best explained by an examination of Figure 4-2. Briefly, fixed values in between the values of the series-resistor chain are obtained first by the shunting of one series resistor with two resistors that will reduce it to 1/3 of its value. In the next step, one shunting resistor is removed, increasing the resistance to 2/3. In the third step, the series resistor is unshunted giving its full value, and the shunting resistors are moved into position to shunt the next series resistor on subsequent steps.

With this scheme, the number of series resistors is reduced to one third of 114 and two resistors are added to the rotor. This idea could be extended to reduce the number of resistors even further, but the number of resistors saved for each additional rotor contact becomes smaller, and the mechanical design becomes more complex.

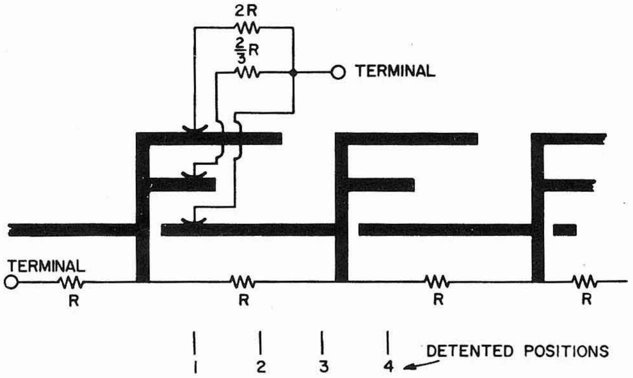

Figure 4-2. Diagram showing centade operation.

4.5 PHASE-COMPENSATION TECHNIQUES.

Several phase-compensating schemes are used to achieve the required D and Q accuracy over such wide ranges. The components used for this purpose are listed below with a brief description of their function.

C13, C14--These capacitors compensate for the inductance of the 1- and 10-ohm ratio-arm resistors.

C3, C3A, and L1--These components are used to make the standard resistor arm (R_3) have a low phase angle and a constant value over the frequency range in spite of the rather large stray capacitance placed across this arm by the bridge transformer and wiring.

C14, C15, and C16--These capacitors are used to compensate for inductance in the winding of the lower-valued DQ rheostat (R_4).

LA, LB, LC, etc, RA, RB, RC, etc on R1--The inductors are used to compensate for the capacitance placed across the whole variable arm by the wiring and switches. The inductors have enough resistance to require resistors in parallel to restore the correct over-all value. See Figure 4-3.

Capacitors are used to compensate for the inductance of the vernier potentiometer R2, and the resistors are used to adjust its value to better than ±1/4% of full scale.

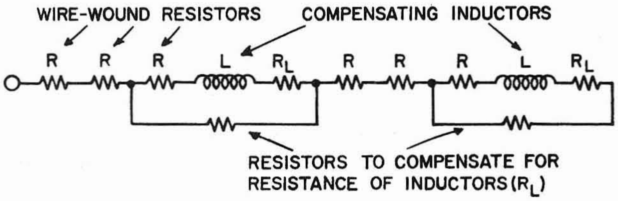

Figure 4-3. Phase compensation of centades.

SECTION 5

SERVICE AND MAINTENANCE

5.1 GENERAL.

The two-year warranty given with every General Radio instrument attests the quality of materials and workmanship in our products. When difficulties do occur, our service engineers will assist in any way possible.

In case of difficulties that cannot be eliminated by the use of these service instructions, please write or phone our Service Department, giving full information of the trouble and of steps taken to remedy it. Be sure to mention the serial and type numbers of the instrument.

Before returning an instrument to General Radio for service, please write to our Service Department or nearest district office (see back cover), requesting a Returned Material Tag. Use of this tag will insure proper handling and identification. For instruments not covered by the warranty, a purchase order should be forwarded to avoid unnecessary delay.

5.2 CALIBRATION CHECKS.

5.2.1 FIXED BRIDGE COMPONENTS. A calibration check of the fixed-bridge components in the Type 1608-A Impedance Bridge can be made by the series of measurements listed below.

The accuracy of this calibration check depends on the accuracy of the internal standards used. A General Radio Type 1409-T Standard Capacitor is recommended as a capacitance standard. This capacitor is calibrated to ±0.03%. Type 500 Resistors are recommended as the resistance standards. Their accuracy is 0.05% (except for the 1-ohm unit, whose accuracy is 0.15%). More accurate resistors should be used if available, or Type 500 Resistors can be measured to greater accuracy if a suitable bridge is available.

a. Check of R_t' (R3). Measure a known 10-k resistor on both the R_s bridge (11-kΩ range) and the G_p bridge (110-$\mu\mho$range). The average of these two readings is the error in the standard resistor R_t', and is independent of the value of the external standard used. (Actually, it is the difference between the centade R_n and R_t, but the centade is more difficult to adjust and can have any value as long as R_t and C_t are set.) R_t can be easily shunted, preferably with film resistors to

TABLE 5-1
RATIO ARM CHECKING PROCEDURE
(Refer to paragraph 5.2.1 .)

EXT STD	BRIDGE	RANGE	R_a RESISTOR	+ERROR MEANS R_a
1 Ω	R_s	1100 MΩ	R7	too small
10 Ω	R_s	11 Ω	R8*	too small
100 Ω	R_s	110 Ω	R9*	too small
1 k	R_s	1100 Ω	R10*	too small
1 k	G_p	1100 $\mu\mho$	R14*	too large
10 k	G_p	110 $\mu\mho$	R15	too large
100 k	G_p	11 $\mu\mho$	R11	too large
1 MΩ	G_p	1100 n$\mho$	R13	too large

* Actually, the ratio arms for their ranges are the sum of several resistors, but if the previous measurement is correct, the indicated resistor is the component in error.

obtain the correct value if it is too high. If R_t is too low, place small resistors in series with R_t; an easy way of doing this is to connect them to L1 with short leads.

b. Ratio Arms (R_a). If R_t is of the correct value, the ratio-arm resistors can be checked by the series of measurements given in Table 5-1. Note that the same set of ratio arms is used on all bridges except that there are two 1-k resistors (see Table 2-7). The C and G bridges use R14 as a 1-k ratio arm and the L and R bridges use the series sum of R7 + R8 + R9 + R10. The ratio arms may be double-checked by measurement of each external standard (when possible) on both the R_s and G_p bridges.

c. Check of C_t (C1). If the 10-k ratio arm resistor is accurate, C_t may be checked by measurement of a 0.1-μf capacitor on the 110-nf range. A positive error in the reading indicates that C1 is too small. If C1 is too small, it can be easily set by additional padding. If C1 is too large, the small padding capacitors already there may be replaced by smaller ones.

5.2.2 CHECK OF CENTADE ACCURACY.

It is not necessary to check the total value of the centade, since if it is slightly in error, a correction of R_t and C_t will give the correct bridge readings (see above). However, the centade must have good linearity. It can be checked over its range by measurement of a decade resistor on the bridge as it is adjusted over the range. A General Radio Type 1432-K is recommended, and this should be adjusted in 10-ohm steps to check each step of the centade. Actually, it is necessary to check only those centade positions that are divisible by three once the first two steps have been checked (refer to paragraph 4.4).

5.2.3 CHECK OF CGRL VERNIER ADJUSTMENT (R2).

The vernier rheostat adjustment can be checked by measurement of a 1-k decade resistor (Type 1432-K) on the 110-kΩ R_s bridge range. The shaft position of this potentiometer should be set to give a correct reading at 1 (10 ohms on the Type 1432-K), and the padding resistors should be adjusted for best accuracy over the rest of the range.

5.2.4 DQ CHECKS.

D and Q scale checks can be made by calculation of D and Q of series or parallel RC combinations of precision components. Checking the two capacitance bridges is much easier than checking the inductance bridges, and checks on both are not necessary since the DQ scales depend upon the same components for both bridges (see Figure 1-2). Likewise, it is easier to check the G_p bridge than the R_s bridge.

The fixed phase-shift error (±0.0005) can be checked on the C bridge by measurement of capacitors with low, known D values. The D error on the lowest C range depends somewhat on the position of the 1-M ratio arm (R13). The fixed Q error on the R_s and G_p bridges can be set by adjustment of C3 (just below the standard capacitor) to give a zero Q reading when a 1-k composition or film resistor is measured.

5.3 ADJUSTMENTS.

5.3.1 OSCILLATOR OUTPUT CONTROL (R529).

This control, on the rear of the printed wiring board at the top of the instrument, controls the maximum output level of the internal RC oscillator. It should be set to give an unclipped output at anchor terminals 32 and 31 when the GEN LEV control is fully off (counterclockwise).

5.3.2 CENTADE ADJUSTMENTS.

The mechanical adjustments of the centade should not be necessary unless the centade assembly has been taken apart. If adjustment is necessary, it should be done carefully and in the correct sequence.

First, adjust the position of the detent block so that the digits of the counter readout are centered in the window. To do this, slightly loosen the hex-head nuts on the rear of the subpanel and rotate the detent block.

Next, connect a component of known value to the bridge and set the FULL SCALE RANGE switch and CGRL control to the correct value. Then balance the bridge by positioning the rotor of the centade. This setting should be accurately made since the centade should change value halfway between the detented steps. Tighten the rotor set screws. It is best to check the centade adjustments at several points of its range.

Finally, loosen the centade knob (the larger knob) and set it so that a zero reading appears when the knob hits the stop, which is on the dress panel under the knob.

The pressure for the centade detent is adjusted by the screw on the detent block directly behind the front panel. The setting of this pressure is a matter of personal preference. Too tight an adjustment will make the control difficult to rotate, and too loose an adjustment will not give the necessary detent action to ensure that the centade rests on a detented position.

5.3.3 ADJUSTMENT OF CGRL VERNIER CONTROL.

The procedure for setting the vernier CGRL control with respect to the counter reading is given in paragraph 5.2.3 above. The stop for this control, mounted on the front of the plate holding the vernier rheostat (see Figure 5), should be set to give a zero reading when the potentiometer is fully counterclockwise. To do this, slightly loosen the hex-head screws and push the detent block in or out as necessary.

5.3.4 DQ RHEOSTAT ADJUSTMENT.

The ganged DQ rheostats (R4 and R5) should be set to give the best overall tracking with the DQ dial, as determined by measurement of RC networks with known D values (see paragraph 5.2.4). The dial should be positioned to give the best tracking with the inner rheostat (R4, LOW D). Then the rotor of the rear rheostat (R5, HIGH D) should be set on the shaft to give the best tracking with the dial.

5.4 REPLACING INDICATOR LAMPS.

The indicator lamps are operated well below their rated voltage and should last for many years. If they do require replacement, the pilot light and the two lamps labeled INDUCTIVE and CAPACITIVE can easily be replaced after their lenses are unscrewed. To replace the other lamps, it is necessary to remove the dress panel. To do this, remove the eight panel screws at the edges, the two screws directly below the meter, and all knobs except the DQ knob.

In order to replace the lamps under the DQ dial, the dial must be removed. Before removing the dial, make a note of its setting so that it can be replaced accurately. The unit dial must be removed to replace the unit indicating lamps and should be replaced in the same position. To replace the lamps held in place by insulating washers, it is easier to unsolder the connection on the pin coming through the washer. Be careful not to let solder or rosin run down this pin and prevent its free movement in the washer.

All lamps are GE Type 327 miniature lamps and are available in most hardware or hobby stores. If unavailable locally, they are available from General Radio Company (our Type 2LAP-7).

A schematic diagram of the lamp circuits is shown in Figure 5-12.

5.5 TROUBLE-SHOOTING SUGGESTIONS.

5.5.1 BRIDGE PROPER.

a. Bridge Error. Refer to paragraph 5.2 for a calibration procedure that will locate any bridge component that is in error.

TABLE 5-2

DC VOLTAGES ON OSCILLATOR-DETECTOR-AMPLIFIER CIRCUIT BOARD

CONTROL SETTINGS:

DET SENS: fully clockwise
GEN LEVEL: fully clockwise
Power: AC INT
BRIDGE SELECTOR: R_s
RANGE: 1100 mΩ
CGRL: maximum
UNKNOWN terminals open

TRANSISTOR (TYPE)	PIN	DC VOLTS	TRANSISTOR (TYPE)	PIN	DC VOLTS
Q525 (2N520A)	E B C	11.4 11.2 6.4	Q552 (2N445A)	E B C	1.82 1.67 4.95
Q526 (2N1415)	E B C	10.6 11.0 4.7	Q553 (2N520A)	E B C	2.88 3.77 1.68
Q550 (TR1)	E B C	0.57 0.61 1.62	Q554 (2N445A)	E B C	7.0 6.3 7.9
Q551 (2N445A)	E B C	1.95 1.62 3.77	Q555 (2N520)	E B C	8.1 7.9 6.6
			OSC OUTPUT DC INPUT	32 42	2.5 vac 14.0 vdc

b. Noisy or Erratic Balance. If the instrument is idle for an extended period, surface contamination of the wire-wound DQ or CGRL vernier adjustments may cause an erratic behavior of the null indicator. To remedy this situation, rotate these controls back and forth several times to clean the brush track.

Misalignment of the centade (CGRL adjustment) may cause a change in its value as it is rocked in a detented position. The rotor of this adjustment should be set so that the centade changes value halfway between the detented steps (see paragraph 5.3.2).

c. Inability to Obtain Balance. If the bridge does not seem to balance at all, several things should be considered before the bridge is assumed defective.

(1) Is the unknown component connected correctly?

(2) Is the unknown what it is thought to be? (Large inductors can look like capacitors at 1 kc.) Try another unknown.

(3) Are all the panel switches set properly?

(4) Are the jumpers between the BIAS terminals and between the EXT DQ terminals in place?

(5) Is the correct bridge being used? (Low Q inductors and high D capacitors should be measured on the R_S and G_P bridges, respectively (refer to paragraphs 2.4.1.1 and 2.4.2.1).

d. Low or No Meter Deflection when Bridge Unbalanced.

(1) Is the GEN LEVEL control on (clockwise)?

(2) Is the DET SENS control on (clockwise)?

(3) Is the function switch set properly (and in a detented position)?

(4) Check the oscillator and detector (see below).

5.5.2 OSCILLATOR AND DETECTOR CHECKS.

The oscillator output can be measured from either BIAS terminal to either EXT DQ terminal when the bridge is set to R_S, L_S, or L_P. If there is no output when the function switch is in the INT AC position and the GEN LEV control is on (clockwise), the oscillator is not operating properly. (Note: the output will be very low with a low-impedance unknown.) The test point voltages given in Table 5-2 and the diagram (Figure 5-16) should enable anyone skilled in the art to locate the difficulty. One of the first things is to try to remove the plug-in frequency board and bend up (slightly) all the terminals to ensure contact.

To check the detector, insert a signal between the LOW UNKNOWN terminal and ground. Be sure the function switch is set properly and the DET SENS control is clockwise.

5.6 TABLES OF TEST VOLTAGES.

The following tables give voltages as an aid in trouble-shooting. Table 5-2 lists dc voltages at transistor terminals on the oscillator-detector-amplifier etched board. Table 5-3 gives voltages from the UNKNOWN terminals to chassis for the R and G bridges. J1 in this table is the left-hand binding post, J2 the right.

All voltages are as measured with a vacuum-tube voltmeter, and are dc voltages from the terminal designated to chassis, except as otherwise indicated. Line voltage for measurements should be 115 volts.

TABLE 5-3
DC VOLTAGES ON UNKNOWN, R AND G BRIDGES

Centade at maximum
GEN LEVEL fully clockwise
For location of S3, 401FR, see Figure 5-1.

RANGE	MEASURE		VOLTS DC
	FROM	TO	
1100 mΩ	S3,401FR	J2	3.5
11 Ω	S3,401FR	J2	3.5
110 Ω	S3,401FR	J2	3.5
1100 Ω	J1	Chassis	30
11 kΩ	J1	Chassis	35
110 kΩ	J1	Chassis	180
1100 kΩ	J1	Chassis	340
1100 n℧	J1	Chassis	340
11 μ℧	J1	Chassis	180
110 μ℧	J1	Chassis	40
1100 μ℧	S3,401FR	J2	35
11 m℧	S3,401FR	J2	30
110 m℧	S3,401FR	J2	3.5
1100 m℧	S3,401FR	J2	3.5

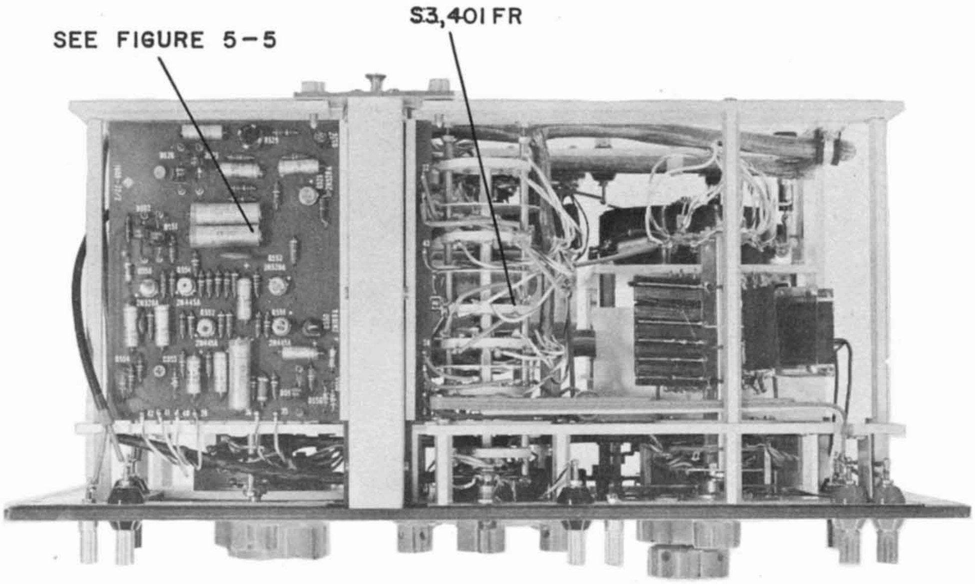

Figure 5-1. Top interior view.

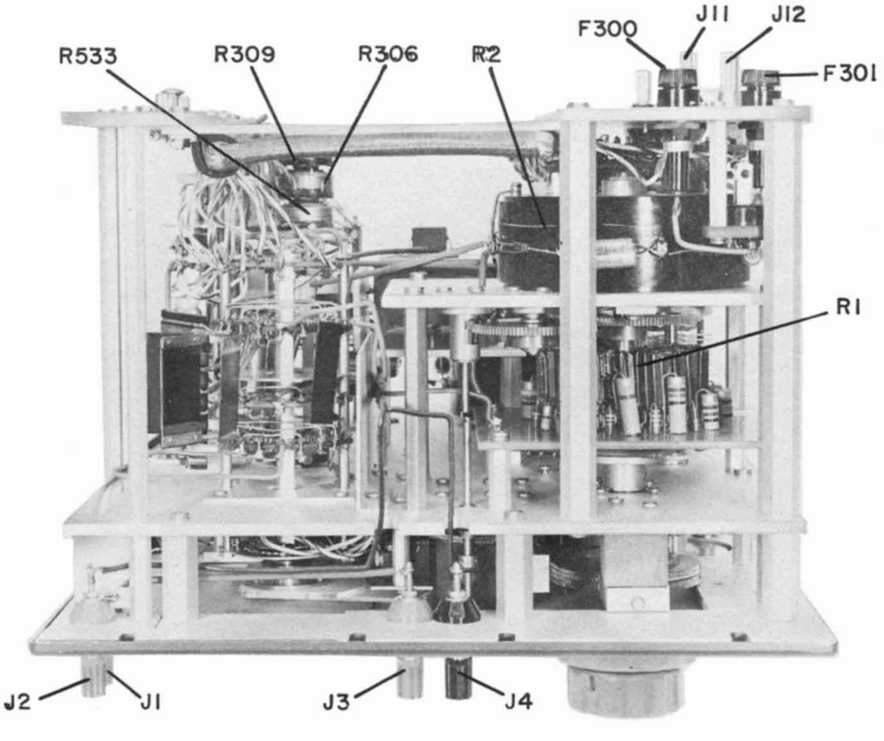

Figure 5-2. Right side interior view.

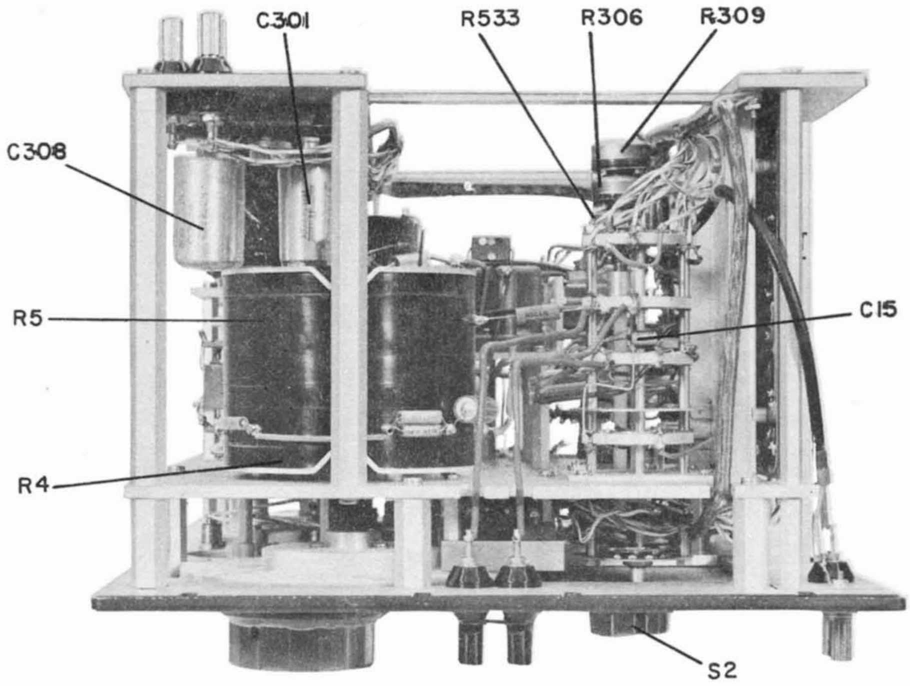

Figure 5-3. Left side interior view.

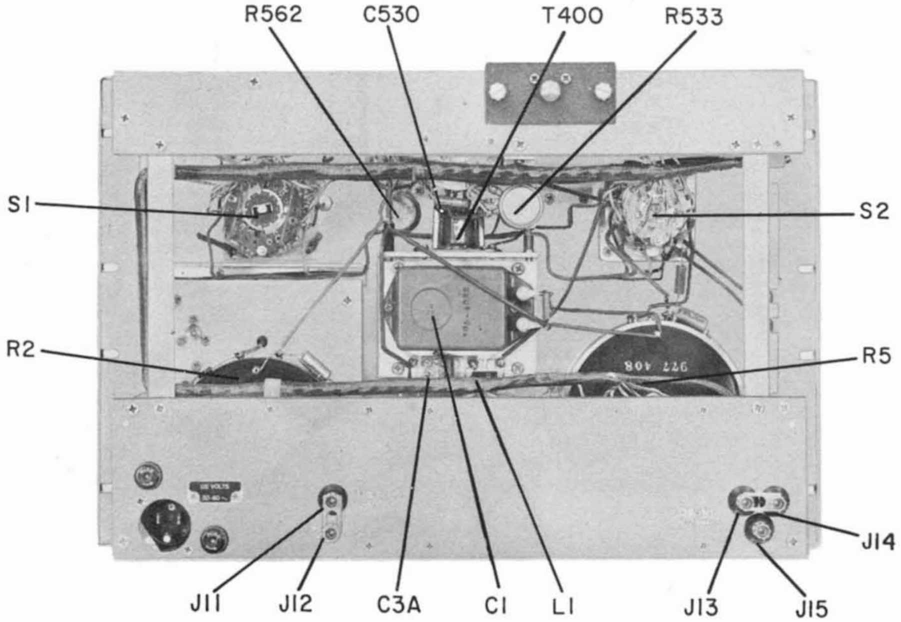

Figure 5-4. Rear interior view.

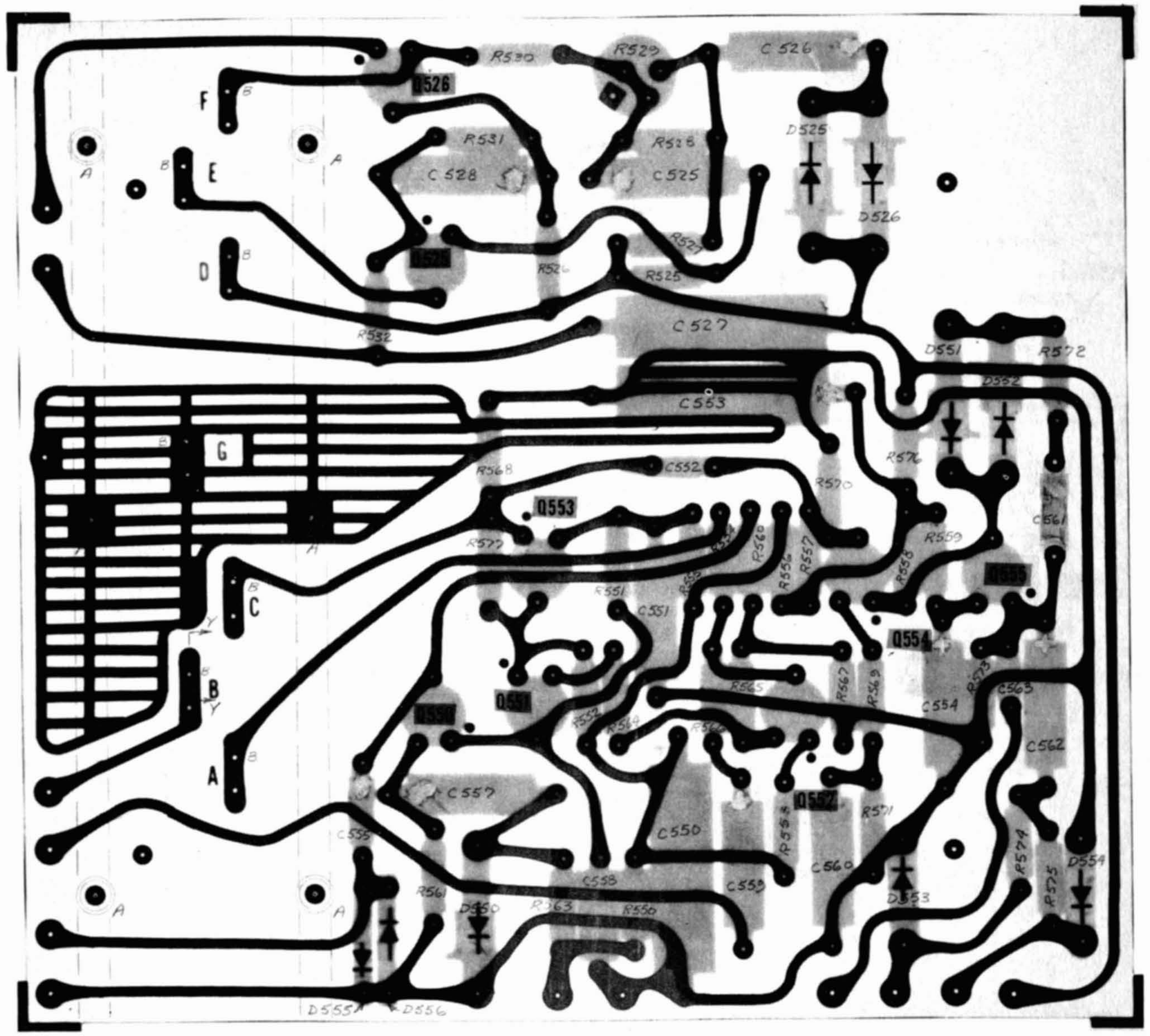

Figure 5-5. Etched board layout.

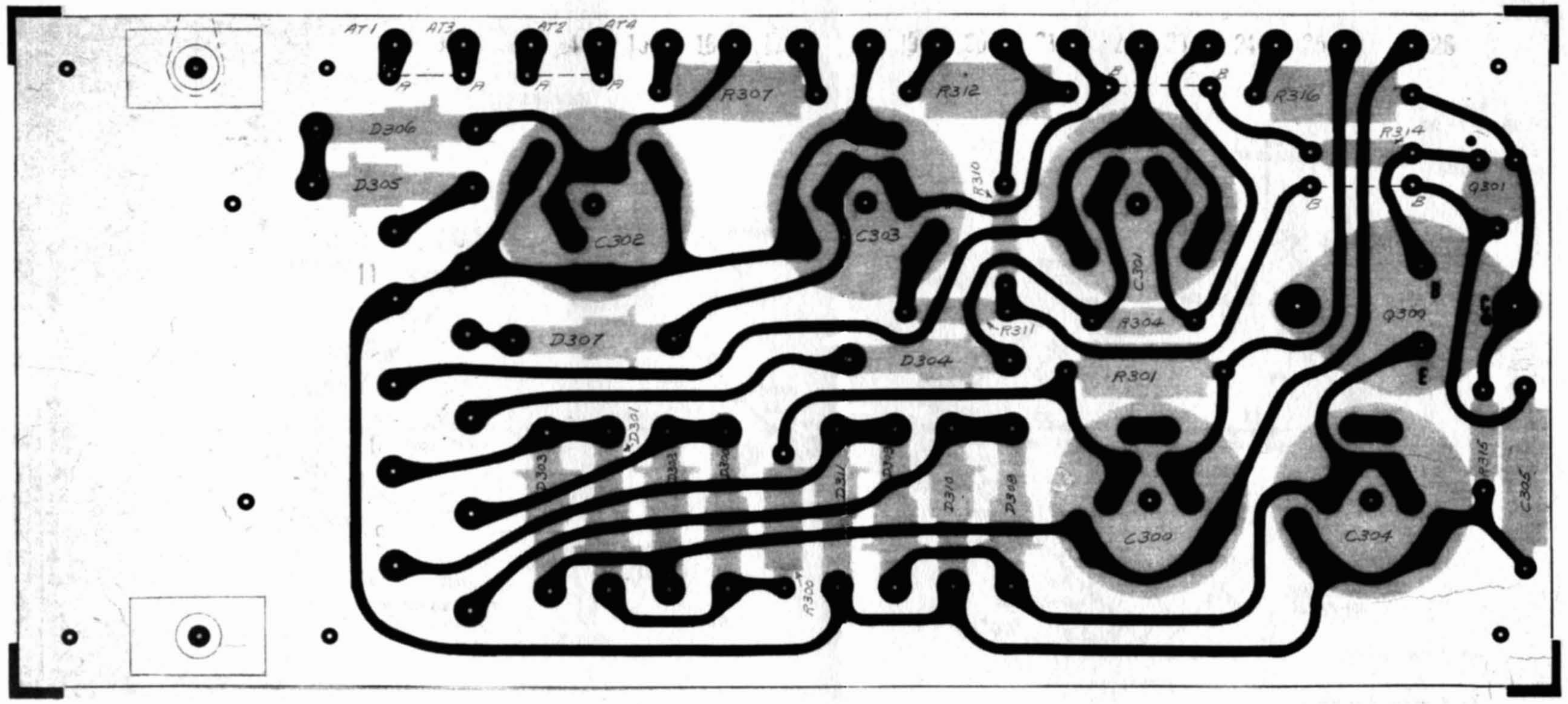

Figure 5-7. Etched board layout.

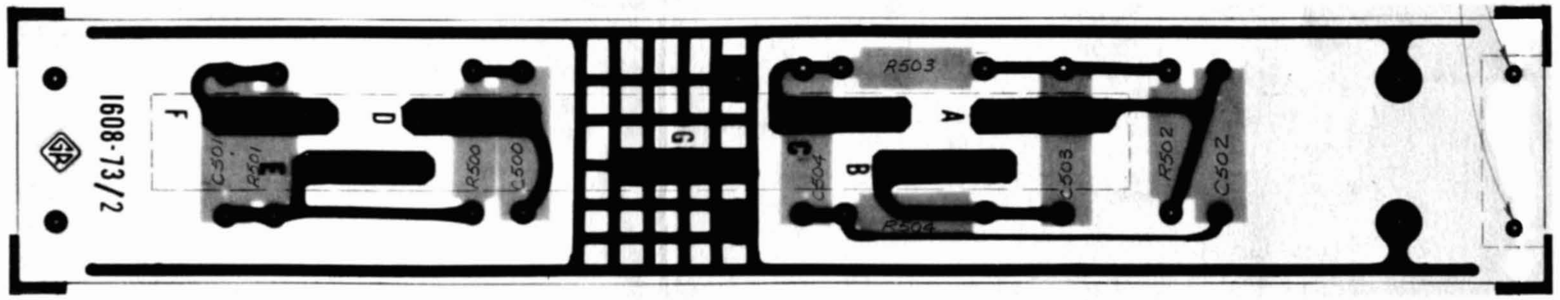

Figure 5-6. Etched board layout.

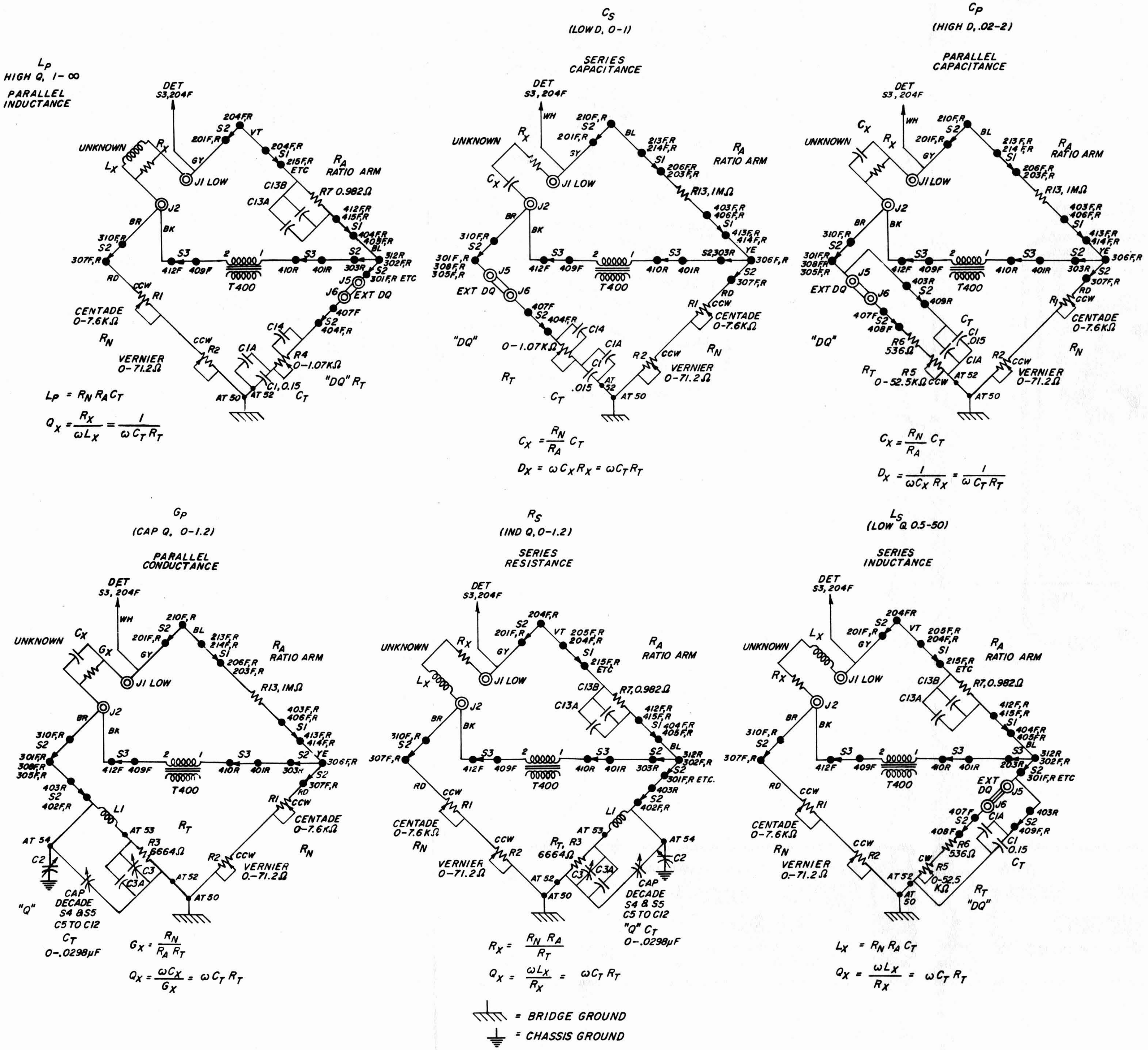

Figure 5-8. Simplified schematic diagram showing bridge circuits.

S1, FULL SCALE RANGE SWITCH = COUNTERCLOCKWISE (LOWEST RANGE)
S3, GENERATOR SELECTOR SWITCH = COUNTERCLOCKWISE (AC INTERNAL)

Figure 5-9. Simplified schematic diagram showing bridge in various positions of FULL SCALE RANGE switch (G_p bridge).

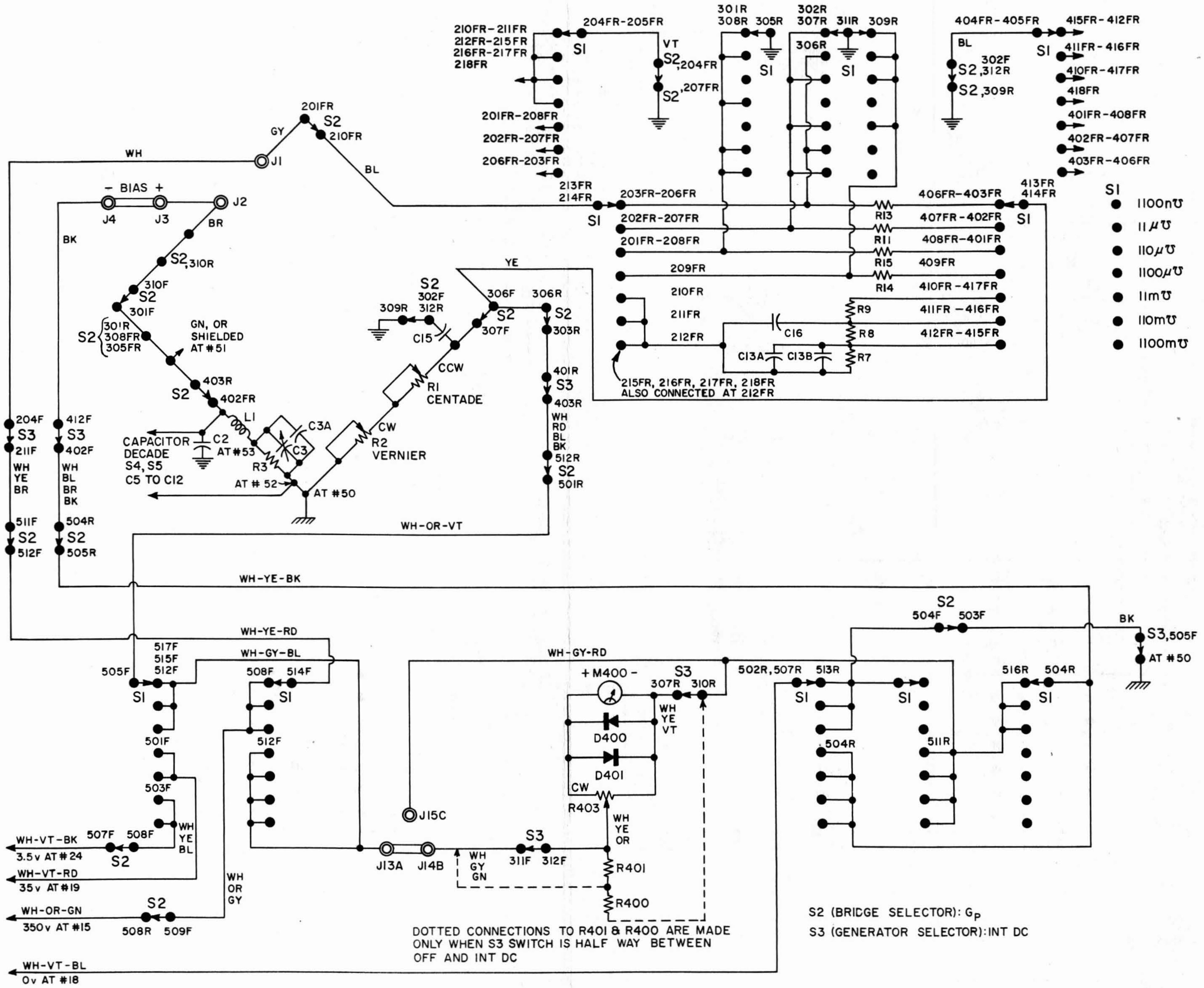

DOTTED CONNECTIONS TO R401 & R400 ARE MADE ONLY WHEN S3 SWITCH IS HALF WAY BETWEEN OFF AND INT DC

S2 (BRIDGE SELECTOR): G_p
S3 (GENERATOR SELECTOR): INT DC

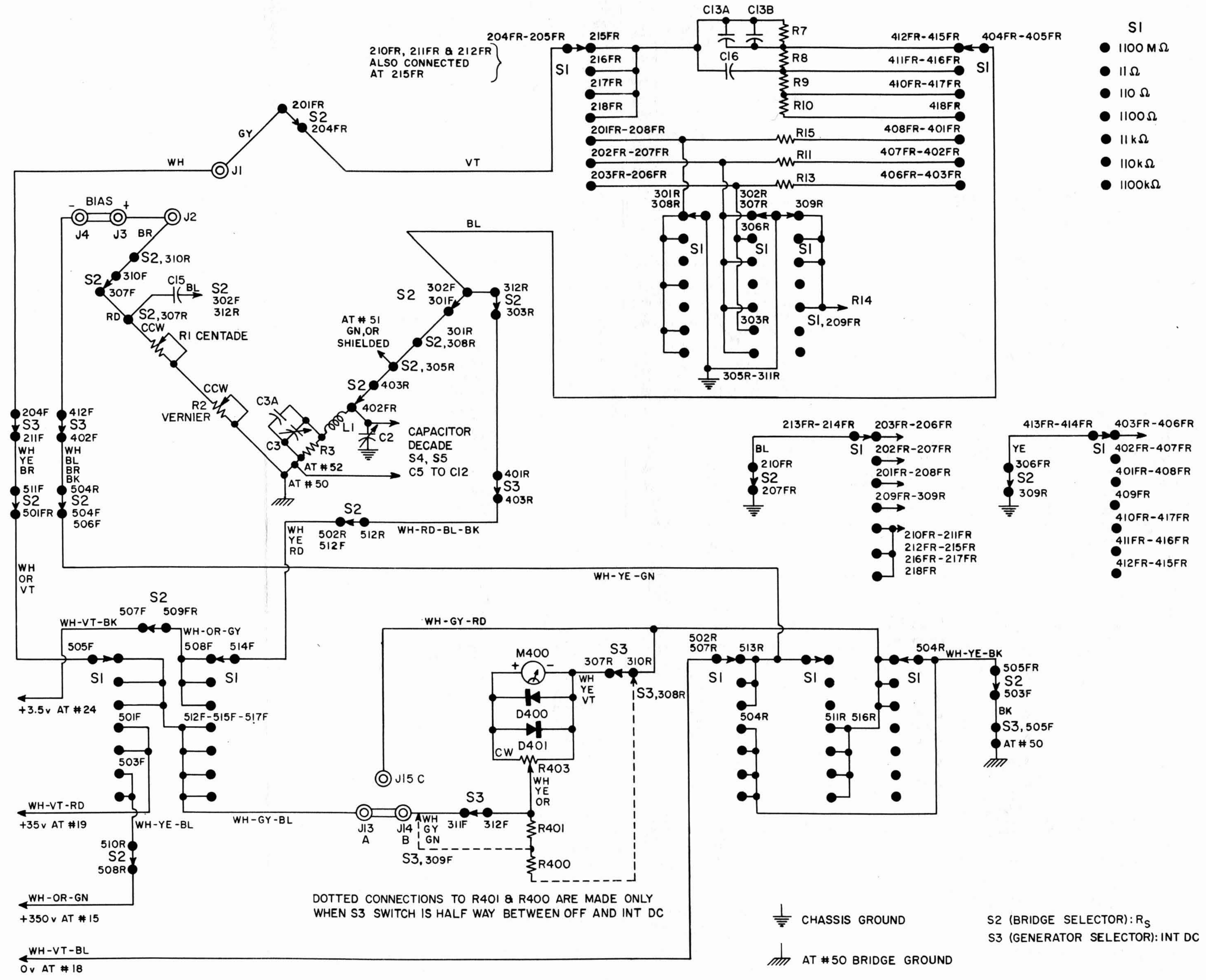

Figure 5-10. Simplified schematic diagram showing bridge in various positions of FULL SCALE RANGE switch (R_S bridge).

Figure 5-11. Simplified schematic diagram showing bridge in various positions of S3 (function switch).

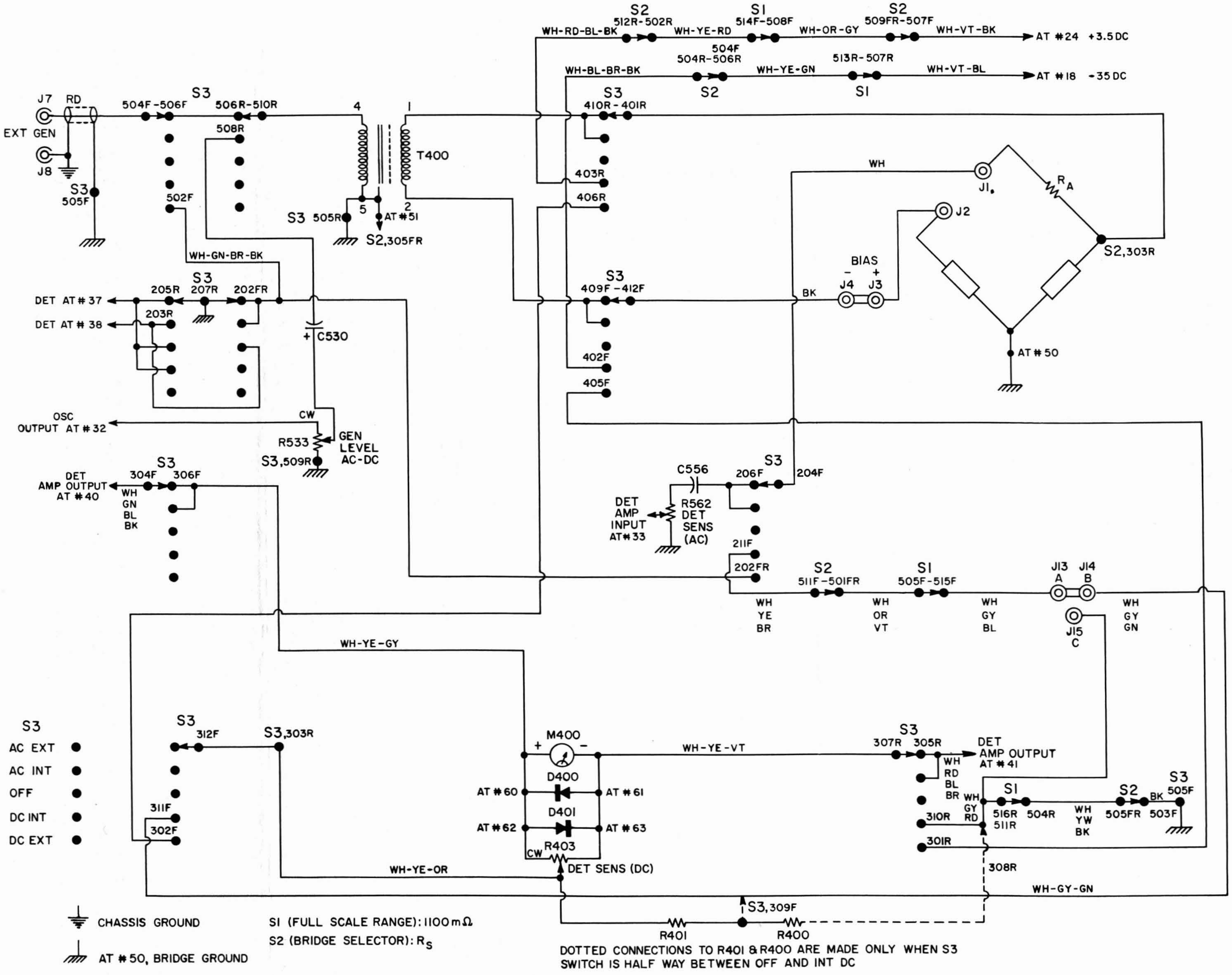

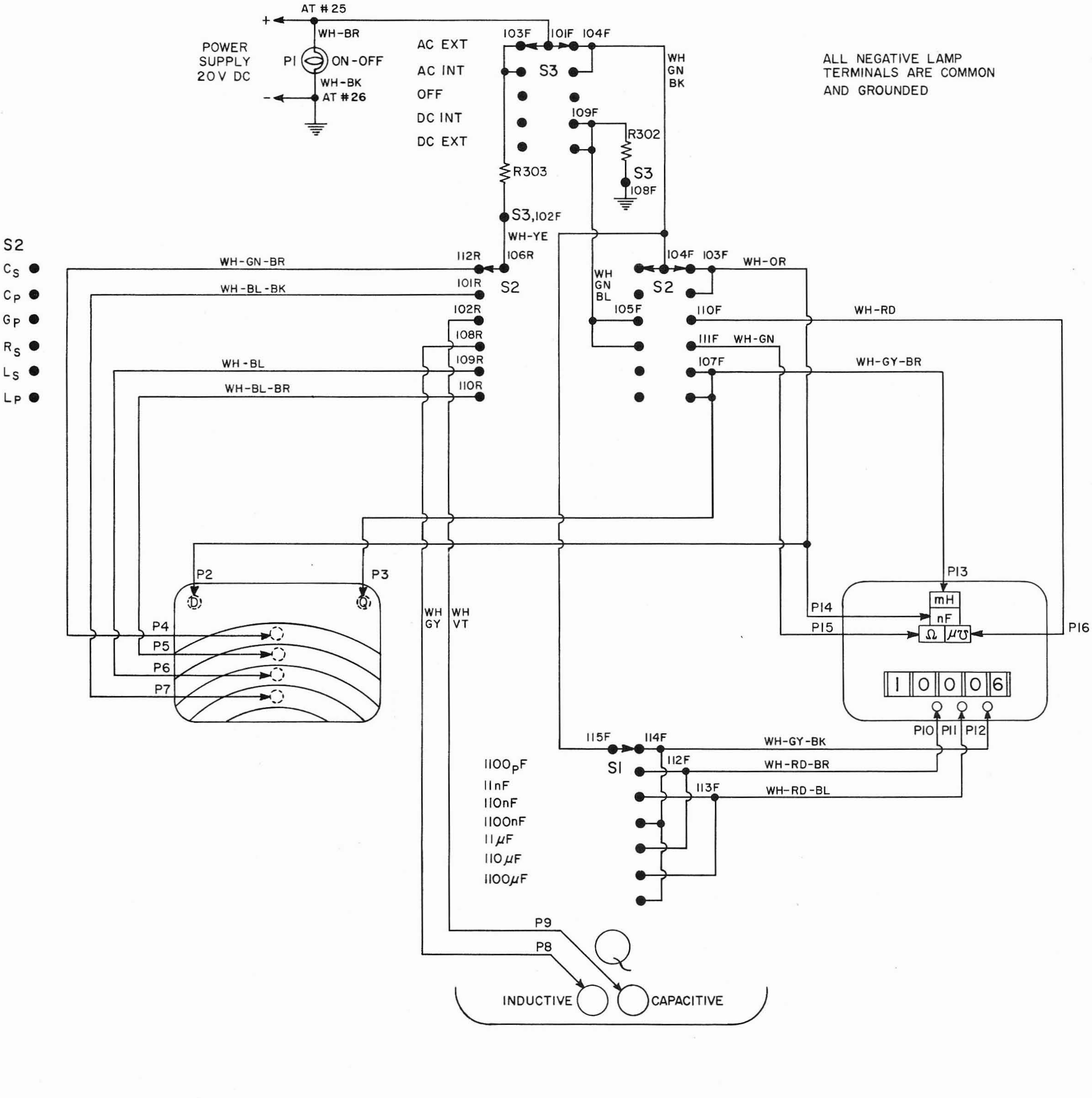

Figure 5-12. Simplified schematic diagram showing light circuits.

JACKS

J1	BP-5R	J9	BP-5B
J2	BP-5R	J10	BP-10, 11/16
J3	BP-5R	J11	BP-5B
J4 thru J7	BP-5B	J12	BP-10, 11/16
		J13	BP-5B
		J14	BP-5B
J8	BP-10, 11/16	J15	BP-5B

CHOKE

L1	12.5mh	±10%	1608-4060

PILOT LAMPS

P1 thru P16	2LAP-7

PLUG

PL300	CDPP-10

M400 — METER 5730-1092

SWITCHES

S1	SWRW-210
S2	SWRW-211
S3	SWRW-212
S4	SWRW-213
S5	SWRW-214

TRANSISTORS

Q300	2N176
Q301	2N445A
Q525	2N520A
Q526	2N1415
Q550	TR-1
Q551	2N445A
Q552	2N445A
Q553	2N520A
Q554	2N445A
Q555	2N520A

TRANSFORMERS

T300	345-479
T400	746-436

NOTES:

(A) Type designations for resistors and capacitors are as follows:

COA - Capacitor, air
COC - Capacitor, ceramic
COE - Capacitor, electrolytic
COM - Capacitor, mica
COT - Capacitor, trimmer
COW - Capacitor, wax

(B) All resistances are in ohms except as otherwise indicated by (kilohms) on M (megohms).

(C) Value determined in General Radio calibration laboratory.

RESISTORS

R1	0-1140	±0.05%		1608-270-2
R2	71.2	±0.5%		977-409
R3	6.664k	±0.02%		510-390
R4	0-1.062k	±2%		977-408
R5	0-52.5k	±2%		977-408
R6	536	±1%		REF-70
R7	0.982	±0.05%		1608-206
R8	9.0	±0.02%		1608-206
R9	90	±0.02%		1608-206
R10	900	±0.02%		1608-206
R11	100k	±0.02%		1608-206
R13	1M	±0.05%		0510-3960
R14	1k	±0.02%		510-390
R15	10k	+0.02%		510-390
R300	10	±10%	1w	REC-30BF(100C)
R301	51	±5%	2w	REC-41BF(510B)
R302	270	±5%	1/2w	REC-20BF(271B)
R303	100	±5%	1/2w	REC-20BF(101B)
R304	390	±5%	1/2w	REC-20BF(391B)
R306	250k	±10%		Part of 1608-404
R307	100k	±5%	2w	REC-41BF(104B)
R309	2.5k	±10%		Part of 1608-404
R310	20k	±5%	1/2w	REC-20BF(203B)
R311	2.4k	±5%	1/2w	REC-20BF(242B)
R312	1k	±5%	2w	REC-41BF(102B)
R314	22k	±5%	1/2w	REC-20BF(223B)
R315	100	±5%	1/2w	REC-20BF(101B)
R316	10	±5%	2w	REC-41BF(100B)
R400	4.7k	±5%	1/2w	REC-20BF(472B)
R401	47k	±5%	1/2w	REC-20BF(473B)
R403	5k	±5%		971-M
R500	8.25k	±1%	1/4w	REF-65(8251A)
R501	8.25k	±1%	1/4w	REF-65(8251A)
R502	15.8k	±1%	1/4w	REF-65(1581A)
R503	15.8k	±1%	1/4w	REF-65(1581A)
R504	7.87k	±1%	1/4w	REF-65(7871A)
R525	3k	±5%	1/2w	REF-20BF(302B)
R526	22k	±5%	1/2w	REF-20BF(223B)
R527	62	±5%	1/2w	REC-20BF(620B)
R528	150	±5%	1/2w	REC-20BF(151B)
R529	1k	±20%		POSC-22
R530	62	±5%	1/2w	REC-20BF(620B)
R531	22k	±5%	1/2w	REC-20BF(223B)
R532	6.8k	±5%	1/2w	REC-20BF(682B)
R533	500	±10%		Part of 1608-404
R550	100k	±5%	1/2w	REC-20BF(104B)
R551	47k	±5%	1/2w	REC-20BF(473B)
R552	20k	±5%	1/2w	REC-20BF(203B)
R553	1k	±5%	1/2w	REC-20BF(102B)
R554	10k	±5%	1/2w	REC-20BF(103B)
R555	4.7k	±5%	1/2w	REC-20BF(472B)
R556	10k	±5%	1/2w	REC-20BF(103B)
R557	100k	±5%	1/2w	REC-20BF(104B)
R558	10k	±5%	1/2w	REC-20BF(103B)
R559	2.2k	±5%	1/2w	REC-20BF(222B)
R560	100k	±5%	1/2w	REC-20BF(104B)
R561	22k	±5%	1/2w	REC-20BF(223B)
R562	50k	±10%		POSC-18
R563	100k	±5%	1/2w	REC-20BF(104B)
R564	1k	±5%	1/2w	REC-20BF(102B)
R565	4.7k	±5%	1/2w	REC-20BF(472B)
R566	4.7k	±5%	1/2w	REC-20BF(472B)
R567	4.7k	±5%	1/2w	REC-20BF(472B)
R568	4.7k	±5%	1/2w	REC-20BF(472B)
R569	1k	±5%	1/2w	REC-20BF(102B)
R570	150k	±5%	1/2w	REC-20BF(154B)
R571	18k	±5%	1/2w	REC-20BF(183B)
R572	2k	±5%	1/2w	REC-20BF(202B)
R573	4.7k	±5%	1/2w	REC-20BF(472B)
R574	10k	±5%	1/2w	REC-20BF(103B)
R575	10k	±5%	1/2w	REC-20BF(103B)
R576	1k	±5%	1/2w	REC-20BF(102B)
R577	1M	±5%	1/2w	REC-20BF(105B)

CAPACITORS

C1	0.15μf	±0.05%		505-4022
C1A	NOTE C			COM-20B
C2	14-270pf			COA-30
C3	7-45pf			COT-12
C3A	100pf	±5%		COM-20D(101B)
C5	0.00243μf	±1%		COM-1F(2431A)
C6	0.00475μf	±1%		COM-1F(4751A)
C7	0.00953μf	±1%		COM-1F(9531A)
C8	0.00953μf	±1%		COM-1F(9531A)
C9	243pf	±1%		COM-22F(2430A)
C10	475pf	±1%		COM-22F(4750A)
C11	953pf	±1%		COM-22F(9530A)
C12	953pf	±1%		COM-22F(9530A)
C13A	0.33μf	±10%	100dcwv	COW-17(334C)
C13B	0.47μf	±10%	100dcwv	COW-17(474C)
C14	NOTE C			COM-35
C15	10pf	±10%	500dcwv	COC-21(100C)
C16	0.0047μf		500dcwv	COC-62(472D)
C300A	100μf		50dcwv	COE-15
C300B	100μf		50dcwv	COE-15
C301A	100μf		50dcwv	COE-15
C301B	100μf		50dcwv	COE-15
C302A	10μf		450dcwv	COE-5
C302B	10μf		450dcwv	COE-5
C303A	100μf		50dcwv	COE-15
C303B	100μf		50dcwv	COE-15
C304A	300μf		15dcwv	COE-36
C304B	300μf		15dcwv	COE-36
C305	15μf		15dcwv	COE-55
C500	0.02μf	±1%	300dcwv	COM-1F(203A)
C501	0.02μf	±1%	300dcwv	COM-1F(203A)
C502	0.01μf	±1%	500dcwv	COM-1F(103A)
C503	0.02μf	±1%	300dcwv	COM-1F(203A)
C504	0.01μf	±1%	500dcwv	COM-1F(103A)
C525	50μf		3dcwv	COE-63
C526	40μf		6dcwv	COE-54
C527	25μf		50dcwv	COE-48
C528	10μf		25dcwv	COE-56
C530	10μf		25dcwv	COE-56
C550	25μf		50dcwv	COE-48
C551	10μf		25dcwv	COE-56
C552	0.1μf		50dcwv	COC-63-3
C553	25μf		50dcwv	COE-48
C554	10μf		25dcwv	COE-56
C555	1μf		35dcwv	COE-60
C556	0.22μf	±10%	400dcwv	COW-25(224C)
C557	15μf		15dcwv	COE-55
C558	220pf	±10%	500dcwv	COC-21(221C)
C559	10μf		25dcwv	COE-56
C560	15μf		15dcwv	COE-55
C561	1μf		35dcwv	COE-60
C562	10μf		25dcwv	COE-56
C563	0.01μf		50dcwv	COC-61-3

DIODES

D300		D401	1N1692
thru	1N1692	D525	1N91
D304		D526	1N91
D305	1N1694	D550	1N1692
D306	1N1694	D551	1N1692
D307		D552	1N1692
thru	1N1692	D553	
D311		thru	1N191
D400	1N1692	D556	

FUSES

F300	(115v)0.2 amp	FUF-1(0.2)
	(230v)0.1 amp	FUF-1(0.2)
F301	(115v)0.2 amp	FUF-1(0.2)
	(230v)0.1 amp	FUF-1(0.2)

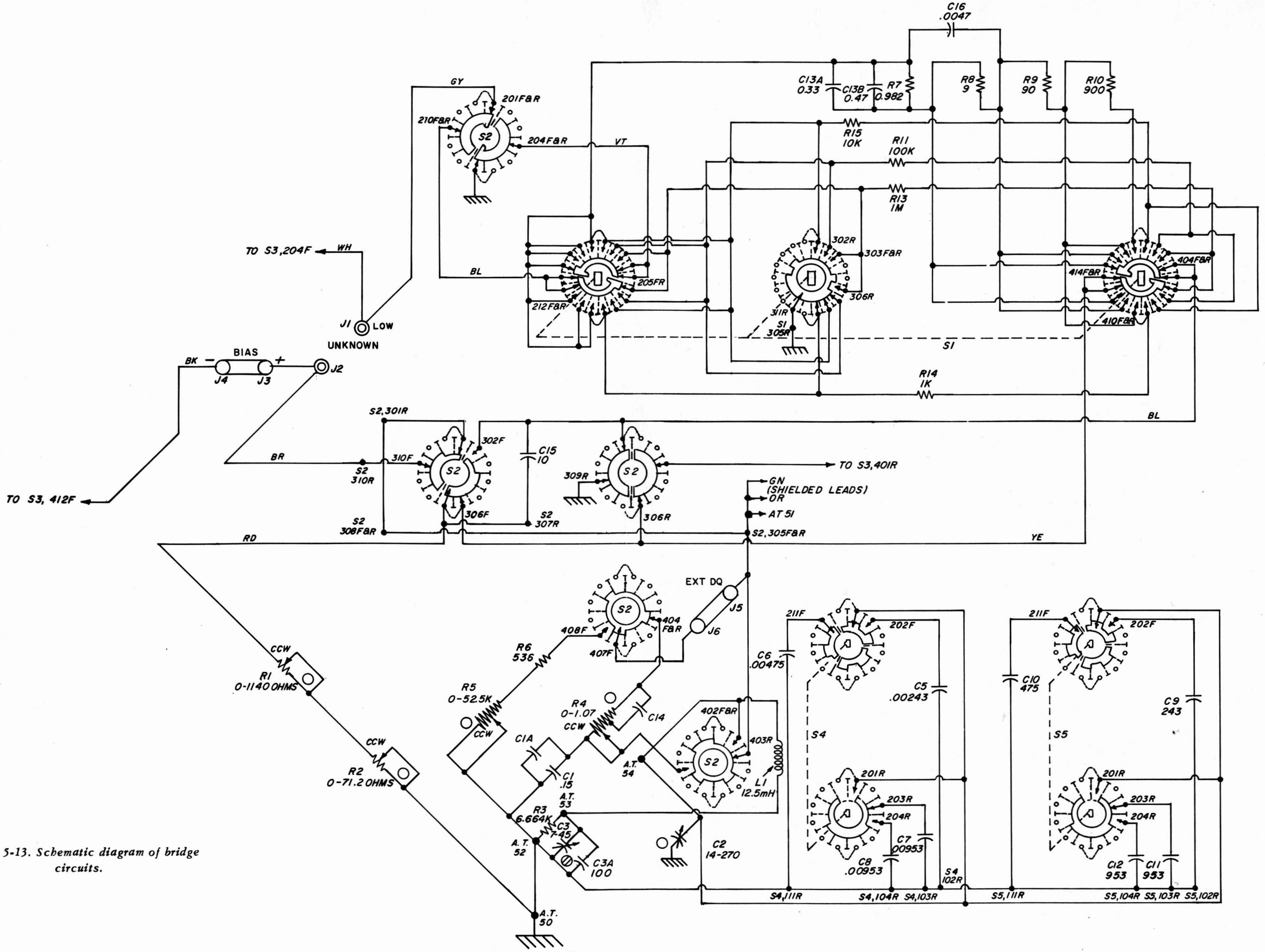

Figure 5-13. Schematic diagram of bridge circuits.

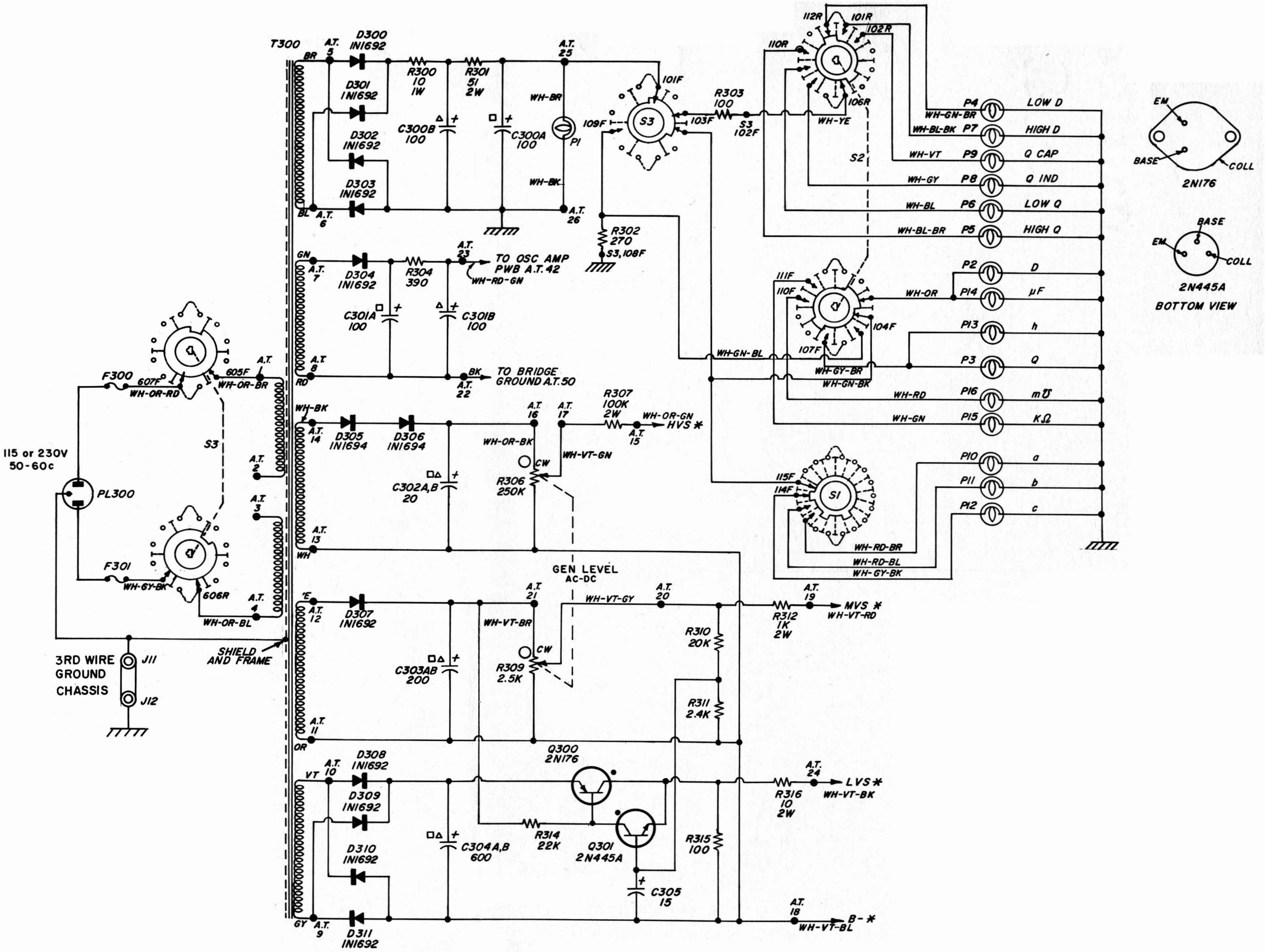

ANCHOR TERMINALS USED: A.T. 1-26

Figure 5-14. Schematic diagram of power supplies and light circuits.

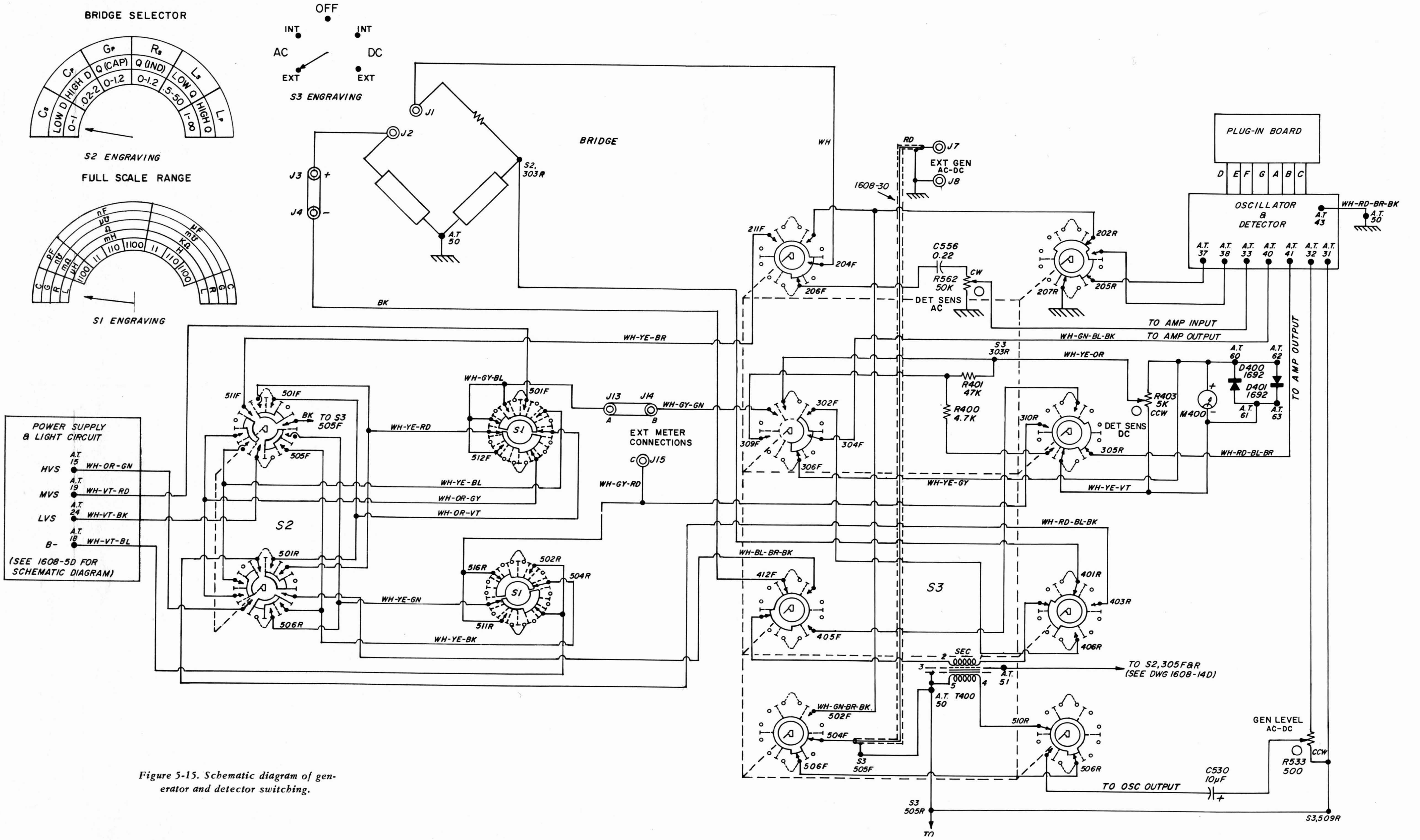

Figure 5-15. Schematic diagram of generator and detector switching.

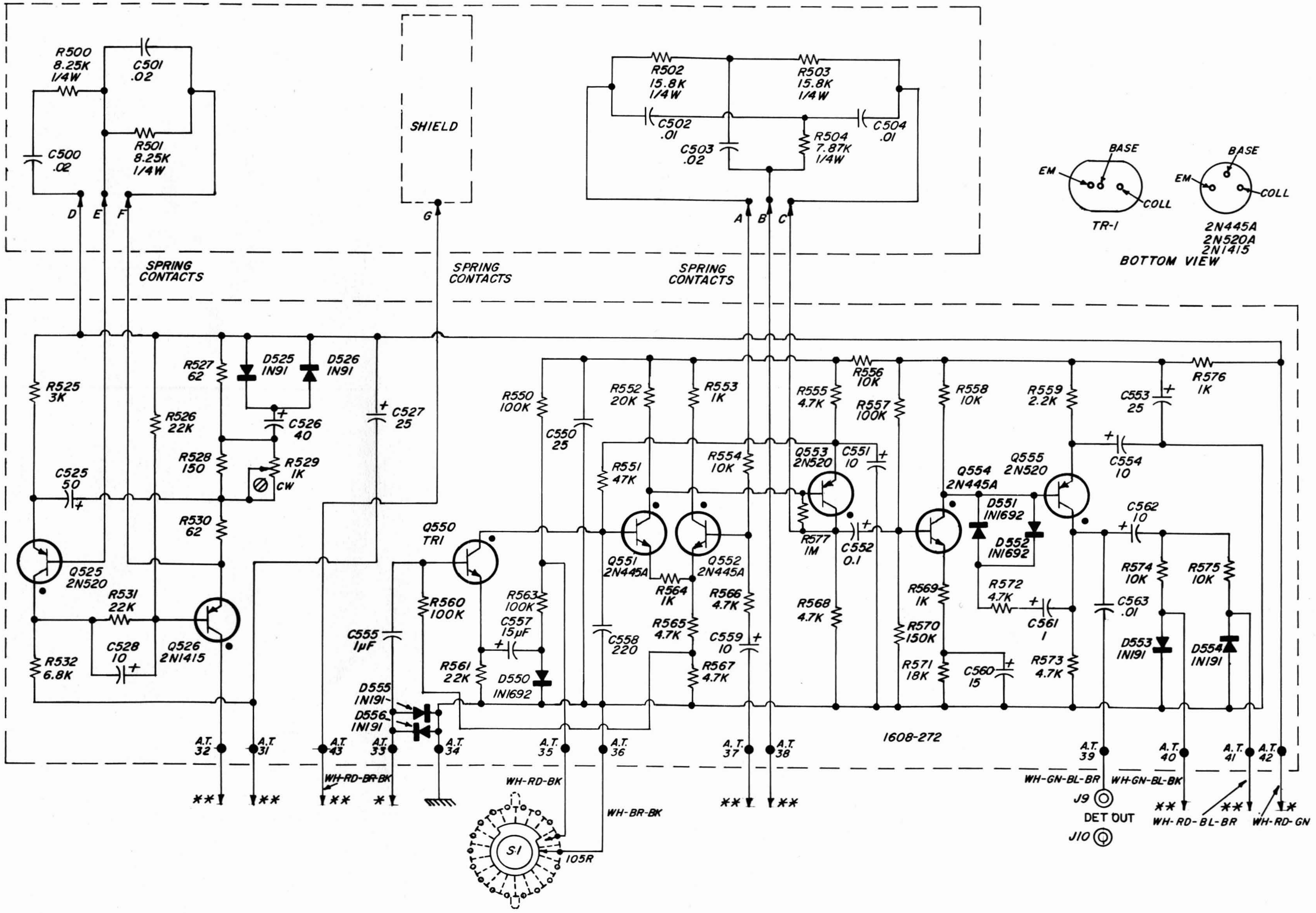

Figure 5-16. Schematic diagram of oscillator and detector.

GENERAL RADIO COMPANY

WEST CONCORD, MASSACHUSETTS

EMerson 9-4400

MIssion 6-7400

DISTRICT OFFICES

NEW YORK

Broad Ave. at Linden, Ridgefield, N. J.
Telephone N.Y. WOrth 4-2722
N.J. WHitney 3-3140

SYRACUSE

Pickard Bldg.
East Molloy Rd., Syracuse 11, N. Y.
Telephone GLenview 4-9323

PHILADELPHIA

1150 York Rd., Abington, Penna.
Telephone TUrner 7-8486
Phila., HAncock 4-7419

WASHINGTON

8055 13th St., Silver Spring, Md.
Telephone JUniper 5-1088

FLORIDA

113 East Colonial Drive, Orlando, Fla.
Telephone GArden 5-4671

CHICAGO

6605 West North Ave., Oak Park, Ill.
Telephone VIllage 8-9400

LOS ANGELES

1000 N. Seward St., Los Angeles 38, Calif.
Telephone HOllywood 9-6201

SAN FRANCISCO

1186 Los Altos Ave., Los Altos, Calif.
Telephone WHitecliff 8-8233

CANADA

99 Floral Pkwy., Toronto 15, Ont.
Telephone CHerry 6-2171

REPAIR SERVICES

EAST COAST

General Radio Company
Service Department
22 Baker Ave., W. Concord, Mass.
Telephone EMerson 9-4400

NEW YORK

General Radio Company
Service Department
Broad Ave. at Linden, Ridgefield, N. J.
Telephone N.Y. WOrth 4-2722
N.J. WHitney 3-3140

MIDWEST

General Radio Company
Service Department
6605 West North Ave., Oak Park, Ill.
Telephone VIllage 8-9400

WEST COAST

General Radio Company
Service Department
1000 N. Seward St.
Los Angeles 38, Calif.
Telephone HOllywood 9-6201

CANADA

General Radio Company
Service Department
99 Floral Pkwy., Toronto 15, Ont.
Telephone CHerry 6-2171

General Radio Company (Overseas), Zurich, Switzerland
Representatives in Principal Overseas Countries

Printed in USA